BASIS OF DESIGN:

A. GRAVITY LOADS

1. ROOF DEAD LOADS	25 PSF
2. ROOF LIVE LOADS	20 PSF
3. 2ND FLOOR DEAD LOAD:	45 PSF
4. 2ND FLOOR LIVE LOADS:	
CORRIDORS	81 PSF
STORAGE	125 PSF
TOILETS	40 PSF
STAIRS	100 PSF
MECHANICAL	150 PSF

B. SNOW LOADS (REFERENCE: ASCE 7-05

GROUND SNOW LOAD, Pg = 5 PSF (FIGURE 7-1)
Ce = 0.90 (TERRAIN CATEGORY C) (TABLE 7-2)
Ct = 1.0 (TABLE 7-3)
I = 1.0 (BUILDING CAT. II) (TABLE 7-4)

C. WIND LOADS (REFERENCE: ASCE 7-05)

BASIC WIND SPEED (3 SECOND GUST), V = 120 MPH (FIGURE 6-1b)
IMPORTANCE FACTOR = 1.00 (TABLE 6-1)
EXPOSURE CATEGORY = C (SECTION 6.5.6)
BUILDING CATEGORY = II (TABLE 1-1)
INTERNAL PRESSURE COEFFICIENTS: +0.18,-0.18 (FIGURE 6-5)
(ENCLOSED BUILDING TYPE)

IN ACCORDANCE WITH ASCE 7-05, THIS STRUCTURE IS LOCATED IN A WIND-BORNE DEBRIS REGION, ALL GLAZING SHALL COMPLY WITH THE PROVISION REQUIRED BY SECTION 6.5.9.3 OF ASCE 7-05.

D. SEISMIC LOADS (REFERENCE: ASCE 7-05)

OCCUPANCY CATEGORY = II (TABLE 1-1)
0.2 SEC SPECTRAL RESPONSE ACCELERATION: Ss = .400
1.0 SEC SPECTRAL RESPONSE ACCELERATION: S1 = .122
Sds = 0.395 Sd1 = 0.187
SOIL SITE CLASSIFICATION = D (ASSUMED) (SECTION 11.4)
BASIC SEISMIC-FORCE-RESISTING SYSTEM
  LONGITUDINAL: INTERMEDIATE MASONRY SHEAR WALLS
  TRANSVERSE: INTERMEDIATE MASONRY SHEAR WALLS
SEISMIC DESIGN CATEGORY = C (SECTION 11.6)
SEISMIC IMPORTANCE FACTOR = 1.00 (SECTION 11.5)
ANALYSIS PROCEDURE: EQUIVALENT LATERAL FORCE (SECTION 12.8)

GENERAL:

1. DO NOT SCALE DRAWINGS. FOLLOW DIMENSIONS SHOWN ON PLAN OR OBTAIN ADDITIONAL INFORMATION.
2. CONTRACTOR SHALL COORDINATE AND VERIFY ALL DIMENSIONS AND ELEVATIONS SHOWN HEREIN WITH ARCHITECTURAL PLANS, SECTIONS, AND DETAILS PRIOR TO CONSTRUCTION OR MATERIAL PURCHASE. CONTRACTOR SHALL NOTIFY ARCHITECT IN WRITING OF ANY DISCREPANCIES NOTED. REFER TO ARCHITECTURAL DRAWINGS FOR ALL DIMENSIONS AND ELEVATIONS NOT SHOWN HEREIN.
3. WHERE DETAIL OR SECTION IS SHOWN FOR ONE CONDITION. IT SHALL APPLY TO ALL LIKE OR SIMILAR LOCATIONS.
4. CONTRACTORS SHALL VISIT THE SITE PRIOR TO BID TO ASCERTAIN CONDITIONS WHICH MAY ADVERSELY AFFECT THE WORK OR COST THEREOF AND SHALL NOTIFY THE ARCHITECT IN WRITING PRIOR TO SUBMITTING BIDS.
5. REFERENCE TO STANDARD SPECIFICATIONS OF ANY TECHNICAL SOCIETY, ORGANIZATION, OR ASSOCIATION OR TO CODES OF LOCAL OR STATE AUTHORITIES, SHALL MEAN THE LATEST STANDARD, CODE, SPECIFICATION, OR TENTATIVE SPECIFICATION ADOPTED AT THE DATE OF TAKING BIDS, UNLESS SPECIFICALLY STATED OTHERWISE.
6. COORDINATE FLOOR SLAB LAYOUT WITH ARCHITECTURAL DRAWINGS FOR EXACT LIMITS AND DEPRESSIONS FOR AREAS TO RECEIVE ARCHITECTURAL FLOOR FINISHES COORDINATE FLOOR JOINTS AT DOORS WITH ARCHITECTURAL DOOR DETAILS. LIMITS SHOWN ON STRUCTURAL DRAWINGS ARE SCHEMATIC.
7. REFER TO ARCHITECTURAL DRAWINGS FOR LOCATION AND DETAILS OF ALL EXTERIOR WALKS, CANOPIES, RAMPS, RAMP WALLS, AND ENTRANCE SLABS NOT DETAILED HEREIN.
8. NO CHANGE IN SIZE OR DIMENSION OF ANY STRUCTURAL MEMBER SHALL BE MADE WITHOUT THE WRITTEN APPROVAL OF THE ENGINEER OF RECORD. NO OPENING SHALL BE MADE IN ANY STRUCTURAL MEMBER WITHOUT THE WRITTEN APPROVAL OF THE ENGINEER OF RECORD UNLESS SPECIFICALLY DETAILED ON THE CONTRACT DRAWINGS.
9. STRUCTURAL DRAWINGS ARE INTENDED TO BE USED WITH ARCHITECTURAL AND MECHANICAL DRAWINGS. CONTRACTOR SHALL BE RESPONSIBLE FOR COORDINATING SUCH REQUIREMENTS INTO THE SHOP DRAWINGS AND CONSTRUCTION ACTIVITIES.
10. THE USE OF REPRODUCTIONS OF CONTRACT DRAWINGS BY ANY CONTRACTOR, SUBCONTRACTOR, ERECTOR, FABRICATOR, OR MATERIAL SUPPLIER, IN LIEU OF PREPARATION OF SHOP DRAWINGS SIGNIFIES HIS ACCEPTANCE OF ALL INFORMATION SHOWN HEREON AS CORRECT AND OBLIGATES HIMSELF TO ANY JOB EXPENSE, REAL OR IMPLIED, ARISING DUE TO ANY ERRORS THAT MAY OCCUR HEREON.
11. CONTRACTOR SHALL BE RESPONSIBLE FOR COMPLYING WITH ALL SAFETY PRECAUTIONS AND REGULATIONS DURING THE WORK. THE ENGINEER WILL NOT ADVISE ON NOR ISSUE DIRECTION AS TO SAFETY PRECAUTIONS AND PROGRAMS.
12. CONTRACTOR HAS THE SOLE RESPONSIBILITY FOR MEANS, METHODS, SAFETY, TECHNIQUES, SEQUENCES, AND PROCEDURES OF ALL CONSTRUCTION SHOWN HEREIN. CONTRACTOR IS RESPONSIBLE FOR CONSTRUCTIBILITY, ANALYSIS, AND ERECTION PROCEDURES, INCLUDING DESIGN AND ERECTION OF FALSE WORK, TEMPORARY BRACING, ETC. CONTRACTOR HAS THE SOLE RESPONSIBILITY TO COMPLY WITH ALL OSHA REGULATIONS.
13. THE STRUCTURE IS STABLE ONLY IN ITS COMPLETED FORM. TEMPORARY SUPPORTS REQUIRED FOR STABILITY DURING ALL INTERMEDIATE STAGES OF CONSTRUCTION SHALL BE DESIGNED, FURNISHED, AND INSTALLED BY THE CONTRACTOR.

FOUNDATIONS:

1. FOUNDATION DESIGN IS BASED ON AN ASSUMED MAXIMUM ALLOWABLE SOIL BEARING PRESSURE OF 2000 PSF. THE STRUCTURAL ENGINEER IS NOT RESPONSIBLE FOR SUBSURFACE CONDITIONS ENCOUNTERED IN THE FIELD DIFFERENT FROM THOSE ASSUMED OR DESIGNED.
2. ALLOWABLE BEARING PRESSURE SHALL BE VERIFIED BY FIELD TESTING IN ACCORDANCE WITH REQUIREMENTS OF THE PROJECT SPECIFICATIONS. IN THE ABSENCE OF SPECIFICATION REQUIREMENTS, A DYNAMIC CONE PENETROMETER TEST (ASTM STP-399) SHALL BE PROVIDED AT EACH COLUMN FOOTING EXCAVATION AND MAXIMUM 75' O.C. IN WALL FOOTINGS AND THICKENED SLABS TO VERIFY AVAILABILITY OF THE DESIGN PRESSURE INDICATED.
3. ALL FOOTINGS AND SLABS SHALL BEAR ON SUBGRADE COMPACTED TO A MINIMUM 95% ASTM D-1557 UNLESS MORE STRINGENT REQUIREMENTS ARE INDICATED IN PROJECT SPECIFICATIONS. UNLESS REQUIRED OTHERWISE BY SPECIFICATIONS, PROVIDE ONE COMPACTION TEST AT EACH COLUMN FOOTING EXCAVATION AND EVERY 50 FEET ON CENTER IN WALL FOOTINGS.
4. NO FOOTINGS SHALL BEAR ON ROCK. UNDERCUT ROCK A MINIMUM OF 2 FEET BELOW BOTTOM OF FOOTING AND REPLACE WITH STRUCTURAL FILL IN ACCORDANCE WITH PROJECT SPECIFICATION REQUIREMENTS.
5. ALL WATER SOFTENED SOILS IN FOUNDATION EXCAVATIONS SHALL BE REMOVED PRIOR TO POURING CONCRETE. FILL OVER-EXCAVATED LIMITS WITH COMPACTED STRUCTURAL FILL OR ADDITIONAL CONCRETE.
6. ALL BOTTOM REINFORCING IN FOOTINGS AND THICKENED SLABS SHALL BE SUPPORTED WITH WHOLE CONCRETE BRICKS OR PREFABRICATED ALL PLASTIC CHAIR SUPPORT AT MAXIMUM 48" O.C. BAR SUPPORTS SHALL BE POSITIONED TO MAINTAIN NO LESS THAN 3" CLEAR TO BOTTOM OF LOWEST REINFORCING BAR.
7. ALL FOOTING, PIER AND OTHER FOUNDATION TYPE REINFORCING SHALL BE TIED IN PLACE PRIOR TO POURING CONCRETE.
8. WHERE PLUMBING LINES OCCUR BELOW TOP OF WALL FOOTINGS TO A DEPTH OF 2 FT. BELOW BOTTOM OF WALL FOOTINGS, STEP WALL FOOTING DOWN TO PROVIDE CLEARANCES INDICATED ON TYPICAL DETAIL HEREIN UNLESS OTHERWISE SPECIFIED. COORDINATE LOCATIONS, SIZES, AND INVERTS WITH PLUMBING DRAWINGS.
9. PROVIDE 1/4" PREMOLDED EXPANSION JOINT FILLER AROUND PERIMETER OF SLABS WHERE THEY ABUT VERTICAL WALL SURFACES AND AT COLUMN ISOLATION JOINTS AS DETAILED.
10. WHERE VERTICAL STEPS IN WALL FOOTINGS SHOWN ON FOUNDATION PLAN, THEY SHALL BE A MAXIMUM 2'-0" HIGH SPACED NO CLOSER THAN 4'-0" O.C.
11. CONSTRUCTION JOINTS IN WALL FOOTINGS SHALL BE FORMED VERTICALLY WITH MINIMUM 2'-0" LAP HORIZONTAL REINFORCING.
12. WHERE FINISHED GRADES DIFFER ON OPPOSITE SIDES OF FOUNDATION WALLS, PROVIDE TEMPORARY BRACING AT TOP OF WALL TO PREVENT LATERAL MOVEMENT UNTIL ALL ADJACENT FILLING, COMPACTION, FLOOR SLABS, WALLS, AND FRAMING AT NEXT LEVEL IS COMPLETED.

CONCRETE:

1. UNLESS OTHERWISE SHOWN, THE CENTERLINES OF ALL PIERS AND COLUMN FOOTINGS/PILE CAPS SHALL BE LOCATED ON COLUMN CENTERLINES OVER.
2. UNLESS SPECIFIED OTHERWISE, CONCRETE COVER OVER REINFORCEMENT SHALL CONFORM TO THE FOLLOWING:
   A. ALL FOOTINGS AND OTHER CONCRETE CAST AGAINST AND PERMANENTLY EXPOSED TO EARTH: 3"
   B. FORMED CONCRETE EXPOSED TO EARTH OR WEATHER:
      #5 BAR AND SMALLER: 1 ½"
      #6 BAR AND LARGER: 2"
3. ALL REINFORCING STEEL SHALL CONFORM TO ASTM A615, GRADE 60, UNLESS NOTED OTHERWISE.PROVIDE A706 BARS WHERE REINFORCING IS INDICATED TO BE WELDED.
4. PROVIDE DOWELS OF THE SAME SIZE AND NUMBER AS THE VERTICAL WALL AND COLUMN REINFORCING, UNLESS NOTED OTHERWISE.
5. REINFORCEMENT SHALL BE SPLICED ONLY AT LOCATIONS SHOWN OR NOTED ON THE STRUCTURAL DOCUMENTS, EXCEPT REINFORCING MARKED CONTINUOUS MAY BE SPLICED AT LOCATIONS DETERMINED BY THE CONTRACTOR. SPLICES AT OTHER LOCATIONS SHALL BE APPROVED IN WRITING BY THE STRUCTURAL ENGINEER.
6. ALL CONCRETE WORK SHALL CONFORM TO ACI 318 AND CRSI STANDARDS.
7. PIPES OR DUCTS SHALL NOT EXCEED 1/3 SLAB TO WALL THICKNESS UNLESS SPECIFICALLY DETAILED. SEE MECHANICAL AND ELECTRICAL DRAWINGS FOR LOCATION OF SLEEVES, ACCESSORIES, ETC.
8. REFER TO ARCHITECTURAL DRAWINGS FOR MOLDS, GROOVES, ORNAMENTS, CLIPS, OR OTHER INSERTS REQUIRED TO BE ENCASED IN CONCRETE AND FOR EXACT LOCATIONS OF FLOOR FINISHES AND SLAB DEPRESSIONS.
9. CONSTRUCTION JOINT LOCATIONS SHALL BE APPROVED BY THE STRUCTURAL ENGINEER. NO HORIZONTAL CONSTRUCTION JOINTS ARE PERMITTED EXCEPT THOSE SHOWN ON THE STRUCTURAL DRAWINGS.
10. DEFECTIVE AREAS IN CONCRETE WORK INCLUDING, BUT NOT LIMITED TO, HONEYCOMBING, SPALLS, AND CRACKS WITH WIDTHS EXCEEDING 0.10" SHALL BE REPAIRED BY THE CONTRACTOR. THE EXTENT OF THE DEFECTIVE AREA SHALL BE DETERMINED BY THE STRUCTURAL ENGINEER.
11. NO REINFORCING SHALL BE CUT IN FIELD. ADDITIONAL REINFORCING AND THAT QUANTITY OF REINFORCING OCCURRING AT OPENINGS SHALL BE PLACED EQUALLY EACH SIDE OF OPENING AS DETAILED.
12. HOOKS IN REINFORCING ARE IN ADDITION TO LINKS SHOWN.
13. UNLESS NOTED OTHERWISE, DETAILING AND FABRICATION OF REINFORCING STEEL SHALL FOLLOW ACI "MANUAL OF STANDARD PRACTICE FOR DETAILING OF REINFORCED CONCRETE STRUCTURES" (ACI 315).
14. REINFORCING SHALL BE SUPPORTED IN FORMS AND SPACED WITH WIRE BAR SUPPORTS ACCORDING TO CRSI "PLACING REINFORCING BARS", UNLESS NOTED OTHERWISE.

CONCRETE MASONRY:

1. REINFORCED WALLS, PIERS, AND PILASTERS, SHALL BE FILLED IN MAXIMUM 8'-0" LIFTS. FILL SHALL BE MECHANICALLY MIXED (ASTM C476) GROUT WITH MAXIMUM ½" DIA. AGGREGATE AND SHALL DEVELOP NOT LESS THAN 2500 PSI MINIMUM 28 DAY COMPRESSIVE STRENGTH.
2. MINIMUM COMPRESSIVE STRENGTH OF CONCRETE MASONRY SHALL BE f'm = 1500 PSI.
3. ALL REINFORCING SHALL BE TIED IN CMU CELLS IN THE LOCATION INDICATED ON THE STRUCTURAL DETAILS AS REQUIRED TO PREVENT DISPLACEMENT OF REINFORCING DURING PLACEMENT OF GROUT.
4. VERTICAL REINFORCING SHALL BE LAPPED AT DOWELS AND SPLICES A MINIMUM OF 48 DIAMETERS BUT NOT LESS THAN 2'-6".
5. PROVIDE A 4"X4" CLEAN-OUT OPENING AT THE BOTTOM COURSE OF EACH VERTICAL LIFT AT ALL REINFORCED CELLS EXCEPT WHERE OPENING CANNOT BE CONCEALED BY BRICK OR OTHER WALL VENEERS OR FINISHES. PRIOR TO FILLING CELLS WITH GROUT, CMU REINFORCED CELLS SHALL BE THOROUGHLY FLUSHED TO REMOVE ALL DEBRIS AND MORTAR PROJECTIONS. SEAL OPENING PRIOR TO FILLING CELL WITH GROUT.
6. WHERE REINFORCED PIERS (TYPES P1, P2, P3, ETC.) ARE INDICATED ON FOUNDATION PLAN, THEY SHALL BE DISCONTINUOUS ABOVE BEARING OF LINTEL EXCEPT AS FOLLOWS:
   OPENINGS 4'-0" TO 8'-0": CONTINUE JAMB REINFORCING 24" ABOVE OPENING
   OPENINGS OVER 8'-0": CONTINUE JAMB REINFORCING TO TOP OF WALL
7. MASONRY CONSTRUCTION SHALL CONFORM TO THE REQUIREMENTS OF THE "SPECIFICATION FOR MASONRY STRUCTURES (ACI 530.1-99)" PUBLISHED BY THE AMERICAN CONCRETE INSTITUTE.
8. REINFORCING STEEL SHALL BE IN ACCORDANCE WITH ASTM A-615, GRADE 60. SHOP FABRICATE REINFORCING BARS WHICH ARE SHOWN TO BE HOOKED OR BENT. ALL REINFORCING DOWELS FROM FOUNDATIONS SHALL MATCH VERTICAL REINFORCING, SIZE AND SPACING INDICATED FOR CONSTRUCTION OF WALL OVER. ALL DOWELS SHALL HAVE STANDARD 90 DEGREE HOOKS (MINIMUM 6").
9. UNLESS INDICATED OTHERWISE IN SPECIFICATIONS OR ON ARCHITECTURAL DRAWINGS, PROVIDE 9 GA. HORIZONTAL TRUSS TYPE JOINT REINFORCING AT 16" O.C. IN ALL WALLS. DISCONTINUE JOINT REINFORCING AT CONTROL JOINTS.
10. PROVIDE CMU CONTROL JOINTS WHERE INDICATED ON ARCHITECTURAL DRAWINGS WITH ADDITIONAL JOINTS SUCH THAT THE SPACING BETWEEN JOINTS DOES NOT EXCEED A SPACING OF 3 TIMES THE WALL HEIGHT (30'-0" MAX.). WHERE BEAMS OR LINTELS BEAR AT CMU CONTROL JOINTS, OFFSET JOINT AND LAP THE VERTICAL REINFORCING AS INDICATED.

STEEL FRAMING:

1. ALL WIDE FLANGE STEEL SHAPES INCLUDING WT'S SHALL BE FABRICATED USING ASTM A992 GRADE 50 STRUCTURAL STEEL MATERIAL. ALL OTHER SHAPES, PLATES, BARS, ETC., SHALL BE ASTM A36 OR AS INDICATED IN DETAILS OR IN SPECIFICATIONS.
2. UNLESS DETAILED OTHERWISE ON STRUCTURAL OR ARCHITECTURAL DRAWINGS, ALL FLAT ROOF AND FLOOR DECK PERIMETERS SHALL BE SUPPORTED USING A CONTINUOUS L5X3X1/4 (SLV) WHERE DECK SPANS PERPENDICULAR TO PERIMETER AND CONTINUOUS L3X3X1/4 WHERE DECK SPANS PARALLEL TO PERIMETER.
3. ALL BOLTED CONNECTIONS SHALL BE MADE WITH 3/4" DIAMETER (MIN.) ASTM A325X HIGH STRENGTH BOLTS (UNLESS NOTED AS ASTM A490X) WITH LOAD INDICATOR WASHERS OR LOAD INDICATOR BOLTS INSTALLED PER MANUFACTURER'S WRITTEN INSTRUCTIONS.
4. STEEL FRAMING, INCLUDING BOLTED AND WELDED CONNECTIONS, BRACING, AND ANCHORAGES SHALL BE COMPLETE AND PLUMB PRIOR TO PLACEMENT OF DECKS.
5. TOP OF STEEL ELEVATIONS SHOWN ON FRAMING PLANS ARE MEASURED FROM FINISHED FIRST FLOOR UNLESS NOTED.
6. ALL STRUCTURAL STEEL CONSTRUCTION SHALL CONFORM TO "SPECIFICATION FOR STRUCTURAL STEEL BUILDINGS - ALLOWABLE STRESS DESIGN AND PLASTIC DESIGN" OF AISC 9TH EDITION.
7. ALL FABRICATIONS SHALL COMPLY WITH "CODE OF STANDARD PRACTICE FOR STEEL BUILDINGS AND BRIDGES", LATEST EDITIONS, AS PUBLISHED BY THE AMERICAN INSTITUTE OF STEEL CONSTRUCTION.
8. THE STRUCTURAL DRAWINGS ARE NOT INTENDED TO REPRESENT ALL STEEL REQUIRED ON THIS PROJECT. CONTRACTOR SHALL REFER TO ARCHITECTURAL DRAWINGS FOR ADDITIONAL MISCELLANEOUS STRUCTURAL STEEL FRAMING NOT SHOWN ON STRUCTURAL DRAWINGS INCLUDING MISCELLANEOUS ANGLE FRAMING, BRACING, ETC.
9. ALL STRUCTURAL STEEL EXPOSED TO WEATHER SHALL BE HOT-DIPPED GALVANIZED UNLESS OTHERWISE DIRECTED BY THE ARCHITECT. WHERE WELDING IS USED ON HOT-DIPPED GALVANIZED FRAMING MEMBERS, WELDS AND ADJACENT AREAS SHALL BE COATED WITH A COLD GALVANIZING COMPOUND. CONTRACTOR TO SUBMIT DATA SHEET OF MATERIAL TO BE USED FOR ARCHITECT'S REVIEW.
10. DO NOT FIELD CUT ANY STRUCTURAL STEEL WITHOUT PRIOR REVIEW AND ACCEPTANCE OF THE ARCHITECT/ENGINEER.
11. CONTRACTOR SHALL COORDINATE LOCATIONS, SIZE AND NUMBER OF ALL ROOF FRAMES FOR MECHANICAL ROOF AND FLOOR PENETRATIONS WITH MECHANICAL DRAWINGS AND EQUIPMENT FURNISHED. LOCATIONS AND SIZES OF FRAME OPENINGS SHOWN ON STRUCTURAL DRAWINGS IS SCHEMATIC ONLY.
12. NO SHOP SPLICE OR OTHER CONNECTION WILL BE PERMITTED UNLESS THAT SPLICE OR CONNECTION IS SHOWN ON THE SHOP DRAWINGS AND REVIEWED BY THE ENGINEER.
13. ALL FASTENERS SHALL CONSIST OF ONE BOLT,ONE LOAD INDICATOR WASHER, ONE HARDENED WASHER, AND ONE NUT. NO SLOTTED HOLES OR ARE ALLOWED UNLESS INDICATED ON SECTIONS AND DETAILS.
14. AFTER ALL FIELD WELDING IS COMPLETED, WELDS SHALL BE CLEANED OF ALL WELDING SPOILS AND RE-PRIMED. SEE SPECIFICATIONS FOR ADDITIONAL REQUIREMENTS.
15. WELDING SHALL BE PERFORMED BY CERTIFIED WELDERS. PROOF OF CERTIFICATION FOR EACH WELDER PERFORMING FIELD WELDING SHALL BE AVAILABLE AT THE JOB SITE. ALL WELDERS SHALL HAVE BEEN CERTIFIED WITHIN THE PREVIOUS 12 MONTHS IN ACCORDANCE WITH SPECIFICATION REQUIREMENTS.
16. WHERE THRU BOLTS ARE DETAILED, PROVIDE A36 OR A307 MATERIAL WITH 3"x1/4"x3" A36 PLATE WASHERS AT THE CMU FACE OF CONNECTION, AND STANDARD WASHERS AT THE STEEL FACE OF CONNECTION.

STEEL COLUMNS:

1. STEEL COLUMN BASES ARE DESIGNED AS "UN-RESTRAINED"; THEREFORE COLUMNS MUST BE KEPT BRACED UNTIL ALL HORIZONTAL FRAMING HAS BEEN INSTALLED.
2. COLUMN ANCHOR RODS SHALL BE INSTALLED AND TIED IN PLACE PRIOR TO POURING CONCRETE. ANCHOR RODS SHALL NOT BE REPAIRED, REPLACED, OR MODIFIED BY THE CONTRACTOR WITHOUT THE APPROVAL OF THE STRUCTURAL ENGINEER.
3. WHERE JOISTS ARE SHOWN AT COLUMN LINES, JOISTS BETWEEN COLUMN LINES SHALL BE EQUALLY SPACED UNLESS NOTED OTHERWISE.
4. UNLESS NOTED OTHERWISE, IF A BEAM IS DISCONTINUOUS AT A COLUMN, BEAM SHALL BE CONNECTED TO THE FACE OF THE COLUMN RATHER THAN ON TOP OF THE COLUMN.
5. UNLESS NOTED OTHERWISE, WHERE BEAMS ARE NOT CONTINUOUS OVER TUBE OR PIPE COLUMNS, PROVIDE 3/8" THICK CLOSURE PLATE ON TOP OF TUBE OR PIPE COLUMNS.
6. UNLESS NOTED OTHERWISE, AT CONNECTION OF BEAMS TO TUBE COLUMNS, PROVIDE PLATE KNIFED THROUGH THE COLUMN AND/OR CONNECT WITH PIECE OF "WT" MEMBER.

STEEL JOISTS:

1. ALL STEEL JOISTS, BRIDGING, AND THEIR CONNECTIONS SHALL BE DESIGNED, FABRICATED, AND ERECTED, ACCORDING TO THE SPECIFICATIONS OF THE STEEL JOIST INSTITUTE, LATEST EDITION.
2. ALL STEEL ROOF JOISTS AND BRIDGING SHALL BE DESIGNED FOR A UNIFORM WIND UPLIFT LOAD PER SCHEDULE THIS SHEET. A 1/3 INCREASE IN ALLOWABLE STEEL STRESSES SHALL NOT BE PERMITTED FOR WIND LOAD COMBINATIONS. STEEL JOIST MANUFACTURER TO PROVIDE ADDITIONAL BRIDGING AT ENDS OF BAR JOIST AS REQUIRED FOR WIND UPLIFT LOAD COMBINATIONS.
3. NUMBER AND LOCATION OF BRIDGING LINES SHOWN ON CONTRACT DRAWINGS IS MINIMUM. STEEL JOIST MANUFACTURER SHALL PROVIDE ADDITIONAL BRIDGING ROWS AS REQUIRED TO MEET STEEL JOIST INSTITUTE REQUIREMENTS AND LATEST OSHA REGULATIONS.
4. STEEL JOIST MANUFACTURER SHALL HAVE SOLE RESPONSIBILITY FOR FABRICATION, AND DETAILING OF ALL STEEL JOIST COMPONENTS TO MEET LATEST OSHA REQUIREMENTS.
5. THE JOIST MANUFACTURER SHALL SUBMIT CALCULATIONS FOR ALL SPECIAL JOISTS TO THE ENGINEER OF RECORD FOR APPROVAL PRIOR TO FABRICATION. THESE CALCULATIONS SHALL BEAR THE SIGNED AND DATED SEAL OF THE PROFESSIONAL ENGINEER REGISTERED IN THE STATE WHERE JOISTS ARE MANUFACTURED.
6. WHERE TWO JOISTS BEAR ON A BEAM WITH A 4" WIDE FLANGE, JOISTS SHALL BE DESIGNED TO CARRY THE DESIGN LOAD WITH A BEARING OF 1 7/8". JOISTS TO BE WELDED ALL-AROUND AND WELDED TO EACH OTHER WHEN MINIMUM BEARING OF 1 7/8" IS USED.
7. STEEL JOISTS SHALL NOT BE MODIFIED WITHOUT THE APPROVAL OF THE STRUCTURAL ENGINEER.
8. NO PIPING, DUCTS, CONDUITS OR ANY OTHER MECHANICAL OR ELECTRICAL COMPONENT SHALL BE SUSPENDED FROM JOIST BRIDGING.

FLOOR DECK:

3" (MIN.) LIGHTWEIGHT CONCRETE FILL (4000 PSI) OVER 9/16" X 26 GA. GALVANIZED STEEL FORM DECK REINFORCED WITH 6X6X8/8 WWF. MINIMUM 3 CONT. SPANS.

ROOF DECK: (SEE ALSO SPECS.)

MINIMUM 2" THICK LIGHTWEIGHT INSULATING CONCRETE FILL OVER 1" (MINIMUM) INSULATING BOARD ON GALVANIZED, CORRUGATED, VENTED STEEL FORM DECKS 1 ½" DEEP AND 22 GA. TYPE "B" WIDE RIB GALVANIZED STEEL DECK WITH MINIMUM 3 CONTINUOUS SPANS. SECURE TO SUPPORTS PER DETAIL SHOWN IN STRUCTURAL DRAWINGS. DO NOT USE SLOTTED TYPE DECK FORMS IN AREAS WHERE BOTTOM OF DECK IS EXPOSED TO VIEW.

ROOF OPENINGS:

1. GENERAL:
   A. OPENINGS UP TO 8": ADD 20 GA. GALVANIZED SHEET 12" LARGER THAN OPENING. ATTACH WITH STAINLESS STEEL SHEET METAL SCREWS MAX. 6" O.C. ON FOUR SIDES.
   B. OPENINGS OVER 8": SEE TYPICAL DETAIL.
2. ROOF DRAIN: SEE TYPICAL DETAIL.
3. ARRANGEMENT, NUMBERING, AND LOCATION OF MECHANICAL OPENINGS ARE APPROX. AND SCHEMATIC AND SHALL BE COORDINATED WITH MECHANICAL AND PLUMBING DRAWINGS TO OBTAIN EXACT CONFIGURATIONS, SIZES, AND LOCATIONS.

SPECIAL STRUCTURAL INSPECTIONS:

A. SPECIAL INSPECTIONS
   1. SPECIAL STRUCTURAL TESTS AND INSPECTIONS SHALL BE PERFORMED ON THIS PROJECT IN ACCORDANCE WITH THE REQUIREMENTS OF CHAPTER 17 OF THE IBC 2006 BUILDING CODE.
   2. SPECIAL STRUCTURAL TESTS AND INSPECTIONS SHALL BE PERFORMED BY AN AGENCY SELECTED BY THE CONTRACTOR AND APPROVED BY THE ENGINEER OF RECORD (EOR) WHICH MEETS ALL OF THE REQUIREMENTS FOR APPROVAL INDICATED IN IBC 2006 SECTION 1703.1. SPECIAL INSPECTORS SHALL BE QUALIFIED PERSONS WHO SHALL DEMONSTRATE COMPETENCE, TO THE SATISFACTION OF THE BUILDING OFFICIAL, FOR INSPECTION OF THE PARTICULAR TYPE OF CONSTRUCTION OR OPERATION REQUIRING SPECIAL INSPECTION.
   3. THE CONTRACTOR SHALL COORDINATE THE INSPECTION SERVICES IN ACCORDANCE WITH THE PROGRESS OF THE WORK. THE CONTRACTOR SHALL PROVIDE SUFFICIENT NOTICE TO THE INSPECTOR TO ALLOW PROPER SCHEDULING OF PERSONNEL.
   4. THE COSTS OF THE SPECIAL INSPECTOR'S SERVICES SHALL BE PAID FOR BY THE OWNER. COSTS OF INSPECTION SERVICES WHICH ARE EXEMPTED UNDER CHAPTER 17 AND SPECIFIED IN THE PROJECT SPECIFICATIONS, SHALL BE PAID FOR BY THE CONTRACTOR.

B. REPORTS
   1. SPECIAL INSPECTORS SHALL KEEP A RECORD OF ALL INSPECTIONS PERFORMED. COPIES OF ALL INSPECTIONS SHALL BE FURNISHED TO THE BUILDING OFFICIAL, THE ARCHITECT, AND THE EOR WITHIN 48 HOURS OF THE INSPECTION.
   2. REPORTS SHALL INDICATE THAT THE WORK WAS PERFORMED AND CONSTRUCTED IN ACCORDANCE WITH THE CONTRACT DOCUMENTS. WORK WHICH DOES NOT CONFORM TO THE CONTRACT DOCUMENTS SHALL BE IDENTIFIED IN THE REPORT AND SHALL BE BROUGHT TO THE IMMEDIATE ATTENTION OF THE CONTRACTOR.
   3. A FINAL REPORT OF INSPECTIONS DOCUMENTING REQUIRED SPECIAL INSPECTIONS INCLUDING ANY DISCREPANCIES NOTED IN THE INSPECTIONS SHALL BE SUBMITTED TO THE BUILDING OFFICIAL, THE ARCHITECT, AND THE EOR PRIOR TO COMPLETION OF THE STRUCTURAL SYSTEMS BUT AT A FREQUENCY NOT TO EXCEED 60 DAYS.

C. REQUIRED SPECIAL INSPECTIONS

IBC SECTION	DESCRIPTION OF WORK	SPECIAL INSPECTION REQUIRED YES	NO	REMARKS
1704.2	INSPECTION OF FABRICATORS	X		1
1704.3	STEEL CONSTRUCTION	X		2
1704.4	CONCRETE CONSTRUCTION	X		3
1704.5	MASONRY CONSTRUCTION	X		4
1704.6	WOOD CONSTRUCTION		X	
1704.7	SOILS	X		5
1704.8	PILE FOUNDATIONS		X	
1704.9	PIER FOUNDATIONS		X	
1704.10	WALL PANELS AND VENEERS		X	
1704.11	SPRAYED FIRE-RESISTANT MATERIALS	X		
1704.12	EXTERIOR INSULATION AND FINISH SYSTEMS		X	
1704.13	SPECIAL CASES		X	
1704.14	SPECIAL INSPECTION FOR SMOKE CONTROL		X	

REMARKS:
   1. WHERE FABRICATION OF STRUCTURAL LOAD BEARING ELEMENTS (I.E. JOISTS) ARE BEING PERFORMED ON THE PREMISES OF A FABRICATOR'S SHOP, SPECIAL INSPECTIONS ARE REQUIRED.
   2. STEEL SPECIAL INSPECTION: CONTINUOUS AND PERIODIC INSPECTIONS, AS DEFINED BY SECTION 1702 OF THE IBC 2006 BUILDING CODE, SHALL BE PERFORMED BY THE SPECIAL INSPECTION AGENCY IN ACCORDANCE WITH THE REQUIREMENTS OF SECTION 1704.3 AND TABLE 1704.3 WITH THE EXCEPTION THAT INSPECTION OF HIGH STRENGTH BOLTING MAY BE PERIODIC IN ACCORDANCE WITH IBC 2006, SECTION 1704.3.3.2.
   3. CONCRETE SPECIAL INSPECTION: CONTINUOUS AND PERIODIC INSPECTIONS, AS DEFINED BY SECTION 1702 OF THE IBC 2006 BUILDING CODE, SHALL BE PERFORMED BY THE SPECIAL INSPECTION AGENCY IN ACCORDANCE WITH THE REQUIREMENTS OF SECTION 1704.4 AND TABLE 1704.4.
   4. MASONRY SPECIAL INSPECTION: CONTINUOUS AND PERIODIC INSPECTIONS, AS DEFINED BY SECTION 1702 OF THE IBC 2006 BUILDING CODE, SHALL BE PERFORMED BY THE SPECIAL INSPECTION AGENCY IN ACCORDANCE WITH THE REQUIREMENTS OF SECTION 1704.5 AND TABLE 1704.5.1 (NON-ESSENTIAL FACILITIES) OR TABLE 1704.5.3 (ESSENTIAL FACILITIES).
   5. SOILS SPECIAL INSPECTION: INSPECTION OF THE EXISTING SITE SOIL CONDITIONS, FILL PLACEMENT AND LOAD BEARING REQUIREMENTS SHALL BE PERFORMED BY THE SPECIAL INSPECTION AGENCY IN ACCORDANCE WITH THE REQUIREMENTS OF SECTION 1704.7 AND TABLE 1704.7.

D. CONTRACTOR RESPONSIBILITY: CONTRACTOR AND SUBCONTRACTORS ENGAGED IN CONSTRUCTION OF MAIN WIND OR SEISMIC-FORCE RESISTING SYSTEMS SHALL SUBMIT A STATEMENT OF RESPONSIBILITY TO THE BUILDING DEPARTMENT AND OWNER IN ACCORDANCE WITH THE PROVISIONS OF SECTION 1706.

E. SPECIAL INSPECTIONS FOR SEISMIC RESISTANCE SHALL BE PROVIDED IN ACCORDANCE WITH THE REQUIREMENTS OF IBC SECTION 1707.

F. STRUCTURAL TESTING FOR SEISMIC RESISTANCE SHALL BE PROVIDED IN ACCORDANCE WITH THE REQUIREMENTS OF IBC SECTION 1708.

G. A REPRESENTATIVE OF THE EOR SHALL PERFORM A PERIODIC VISUAL STRUCTURAL OBSERVATION IN ACCORDANCE WITH, AND WHERE REQUIRED BY, IBC SECTION 1709. SUCH OBSERVATIONS SHALL BE PERFORMED AT SIGNIFICANT STAGES OF CONSTRUCTION AND AT THE FINAL COMPLETION OF THE STRUCTURAL SYSTEMS. THE CONTRACTOR SHALL NOTIFY THE EOR TO COORDINATE THE OBSERVATION AND SHALL NOT CONCEAL ANY PORTIONS OF THE STRUCTURAL SYSTEMS (EXCLUDING FOUNDATIONS AND OTHER WALL REINFORCING) PRIOR THE EOR'S FINAL REVIEW.

WIND PRESSURE SCHEDULE

ZONE	Effective Wind Area (sqft)	Maximum Positive Pressure (psf)	Maximum Negative Pressure (psf)
1	10	+13	-32
1	20	+12	-31
1	50	+11	-30
1	100	+10	-29
1	150	+10	-29
2	10	+13	-53
2	20	+12	-47
2	50	+11	-40
2	100	+10	-34
2	150	+10	-34
3	10	+13	-80
3	20	+12	-66
3	50	+11	-48
3	100	+10	-34
3	150	+10	-34
1H	10	+15	-36
1H	20	+14	-35
1H	50	+13	-34
1H	100	+13	-33
1H	150	+12	-33
2H	10	+15	-60
2H	20	+14	-54
2H	50	+13	-46
2H	100	+13	-39
2H	150	+12	-39
3H	10	+15	-91
3H	20	+14	-75
3H	50	+13	-55
3H	100	+13	-39
3H	150	+12	-39

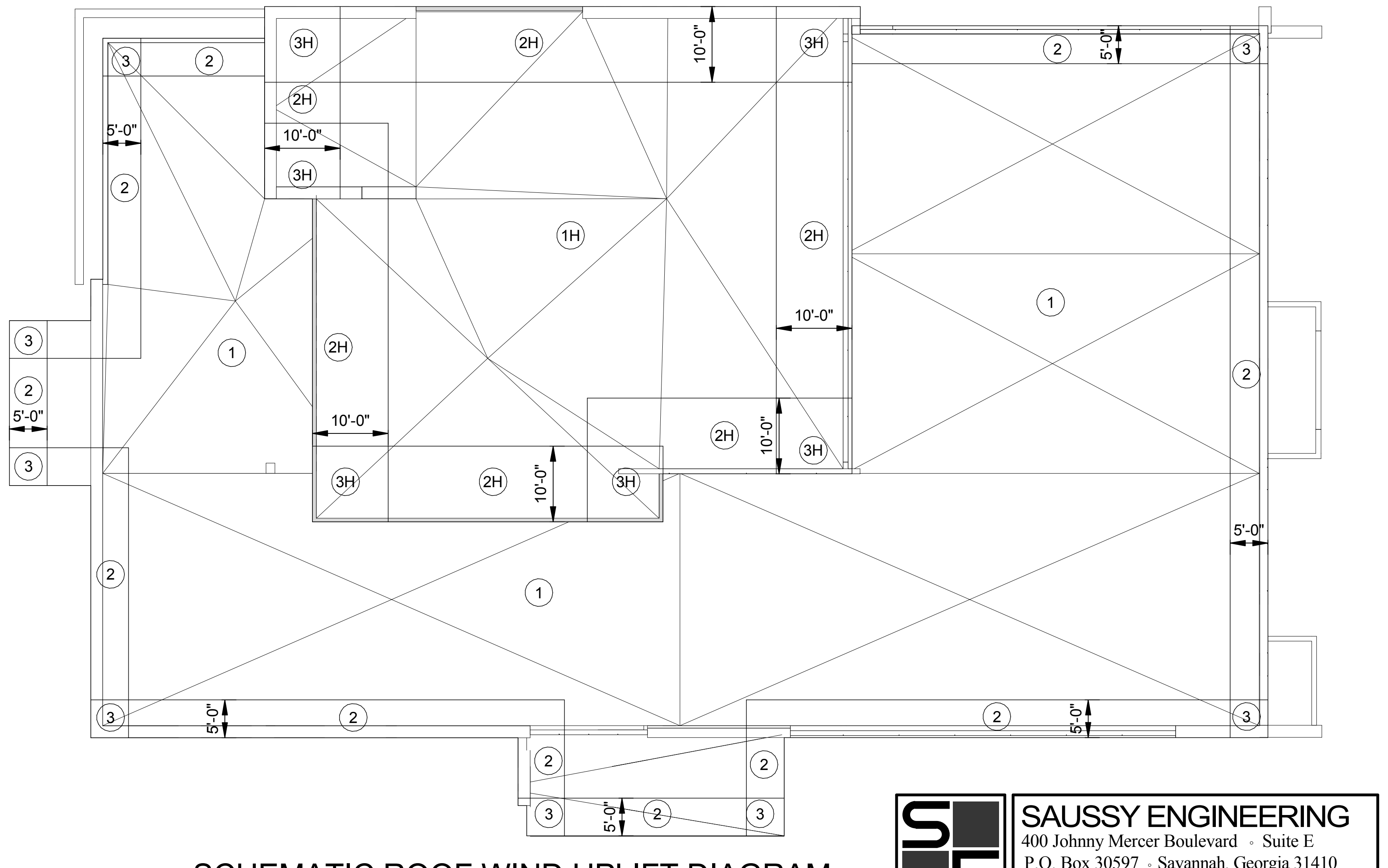

SCHEMATIC ROOF WIND UPLIFT DIAGRAM

SCALE: 1/16"=1'-0"

STRUCTURAL LEGEND

SYMBOLS

— — —	FOOTING
▭	UNREINFORCED CONCRETE MASONRY
▨	REINFORCED CONCRETE MASONRY
▭	CONCRETE
▤	BOND BEAM
■ P2 ■ P3	REINF. MASONRY PIERS
▧	DROP SLAB TO RECEIVE FLOOR FINISH
▨	THICKENED SLAB
FJ	FLOOR JOINT
WFJ	WALL FLOOR JOINT
SJ	SAWN JOINT
TJ	1" DEEP TOOLED JOINT
——×	CONCRETE SLAB TURNDOWN
S 2" →	SLOPE (DIRECTION AND DROP)
—◓	VERTICAL STEP IN WALL FOOTING
T.O.S	TOP OF STEEL ELEVATION
(96.50)	TOP OF FOOTING ELEVATION
R	ADD #4x4'-0" IN CENTERLINE OF SLAB
HSB	HIGH STRENGTH BOLT
S	JOIST BOTTOM CHORD STRUT
⊖	ROOF DRAIN
☒	FRAME AROUND ROOF DECK OPENING
├ ▶—	BEAM TO COLUMN MOMENT CONNECTION

ABBREVIATIONS

W/	WITH
DBL.	DBL.
BOT	BOTTOM
DJ	DOUBLE JOIST
SIM.	SIMILAR
T/O	THROUGHOUT
U.N.	UNLESS NOTED
FJ	FLOOR JOINT
PEJ	PRE-MOULDED EXPANSION JOINT
GA.	GAUGE
E.W.	EACH WAY
O.C.	ON CENTER
CL.	CLEAR
F.D.	FLOOR DRAIN
LLV	LONG LEG VERTICAL
SLV	SHORT LEG VERTICAL
E.J.	EXPANSION JOINT
MBM	METAL BUILDING MANUFACTURER
MBP	METAL BUILDING PURLINS
O.H.	OPPOSITE HAND
PB	PARALLAM BEAM
ML	MICROLAM BEAM
RS	ROUGH SAWN
P.T.	PRESSURE TREATED
P.E.	PRE-ENGINEERED

SHEET LIST

SHEET NUMBER	SHEET NAME
S1.0	STRUCTURAL NOTES
S1.1	FOUNDATION PLAN
S1.2	SECTIONS
S2.1	SECOND FLOOR / LOW ROOF FRAMING PLAN
S2.2	HIGH ROOF FRAMING PLAN
S2.3	SECTIONS
S2.4	SECTIONS
S2.5	SECTIONS
S3.1	COLUMN AND FOUNDATION SCHEDULE
S4.1	TYPICAL DETAILS
S4.2	TYPICAL DETAILS

SAUSSY ENGINEERING
400 Johnny Mercer Boulevard - Suite E
P.O. Box 30597 - Savannah, Georgia 31410
Phone: (912) 898-8255 - Fax: (912) 898-1882
PROJECT NO. 11103

GREENLINE ARCHITECTURE
28 E 35TH ST
SAVANNAH, GA 31401
T 912.447.5665
F 912.447.8381
WWW.GREENLINEARCH.COM

WEST SIDE AND ISLANDS LIBRARIES
LIVE OAK PUBLIC LIBRARIES
WEST SIDE LIBRARY
100 CENTRAL AVE.
GARDEN CITY, GA.

REVISIONS

ADD.#	DATE	DESCRIPTION

STRUCTURAL NOTES

RELEASED FOR
CONSTRUCTION

JOB NO: 11-010
ISSUE DATE: 05/13/13
DRAWN: JEH/GJH

S1.0

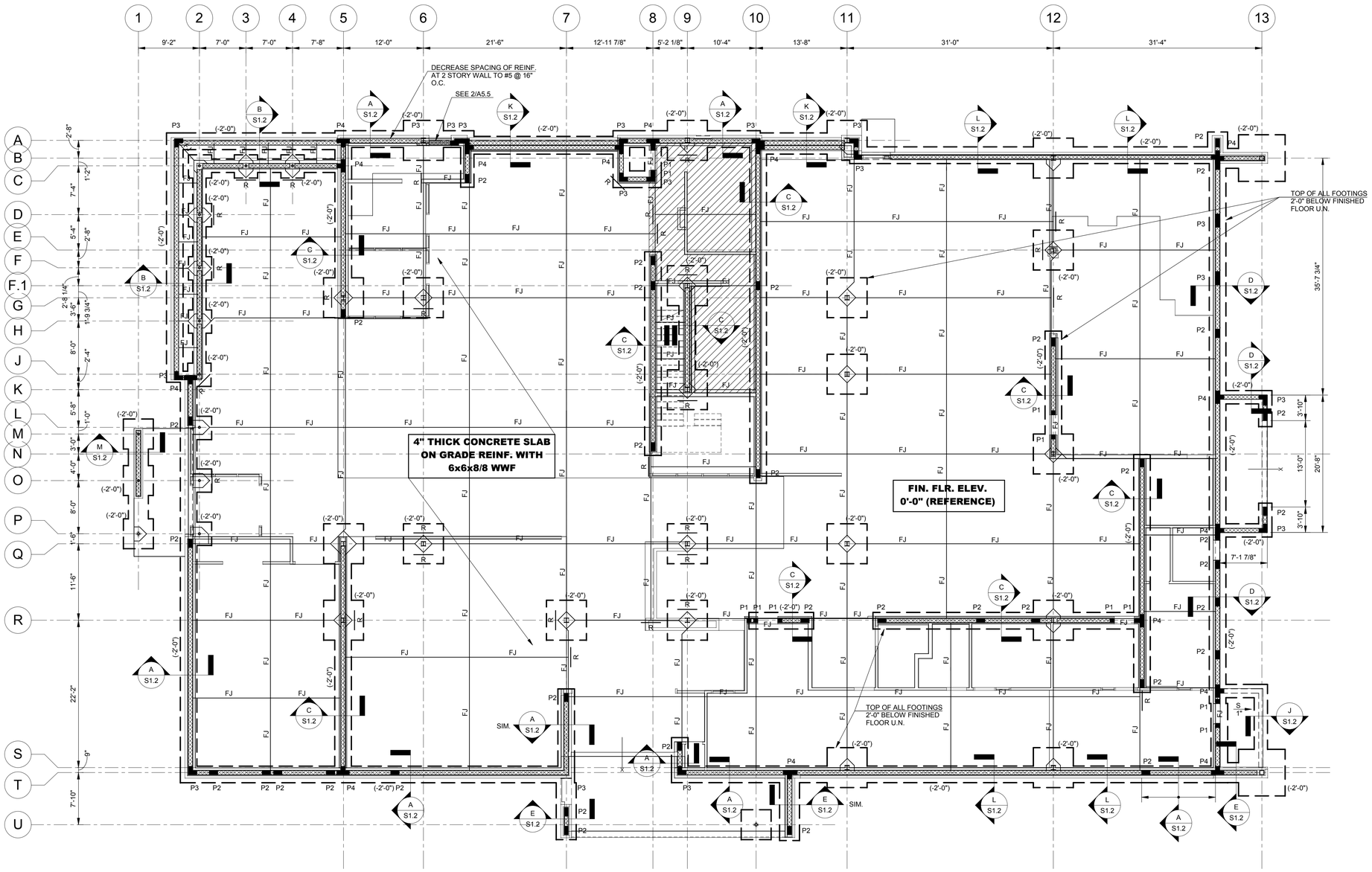

FOUNDATION PLAN

SCALE: 1/8" = 1'-0"

GREENLINE ARCHITECTURE

28 E 35TH ST
SAVANNAH, GA 31401
T 912.447.5665
F 912.447.8381
WWW.GREENLINEARCH.COM

WEST SIDE AND ISLANDS LIBRARIES

LIVE OAK PUBLIC LIBRARIES

WEST SIDE LIBRARY
100 CENTRAL AVE.
GARDEN CITY, GA.

REVISIONS		
ADD.#	DATE	DESCRIPTION

FOUNDATION PLAN

RELEASED FOR CONSTRUCTION

JOB NO: 11-010
ISSUE DATE: 05/13/13
DRAWN: Author

SAUSSY ENGINEERING
400 Johnny Mercer Boulevard - Suite E
P.O. Box 30597 - Savannah, Georgia 31410
Phone: (912) 898-8255 - Fax: (912) 898-1882

PROJECT NO. 11103

S1.1

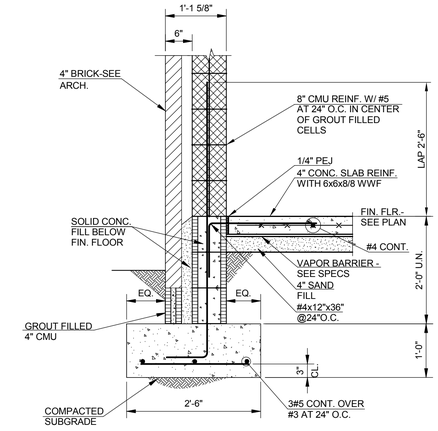

SECTION A S1.2

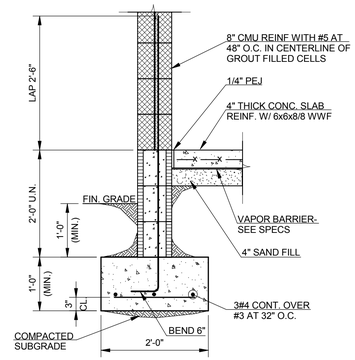

SECTION D S1.2

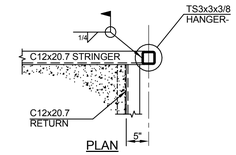

PLAN

SECTION G S1.2

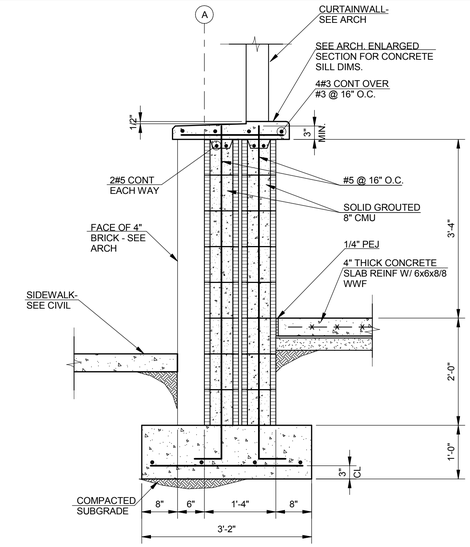

SECTION K S1.2

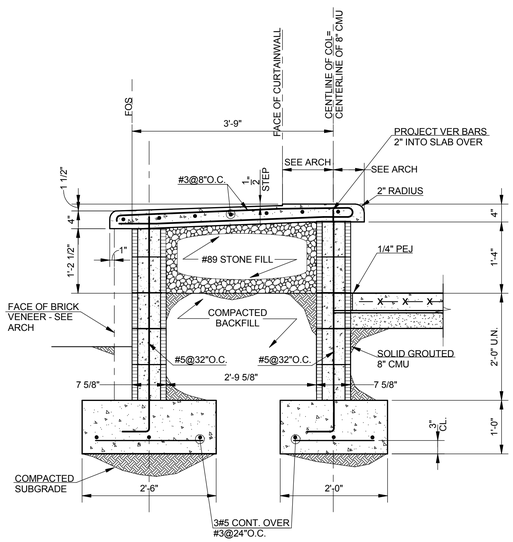

SECTION B S1.2

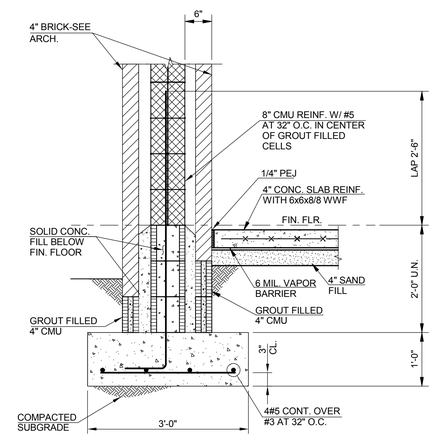

SECTION E S1.2

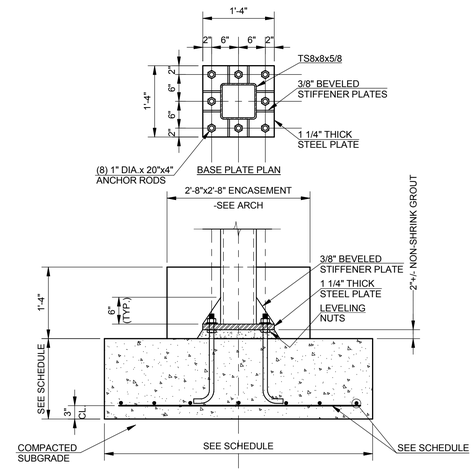

SECTION H S1.2

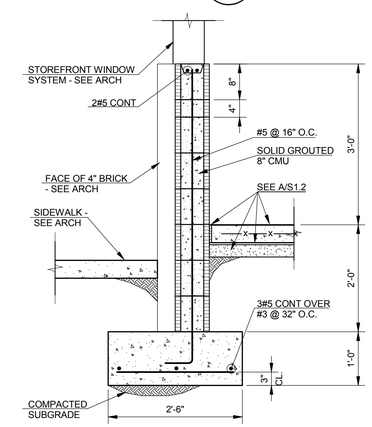

SECTION L S1.2

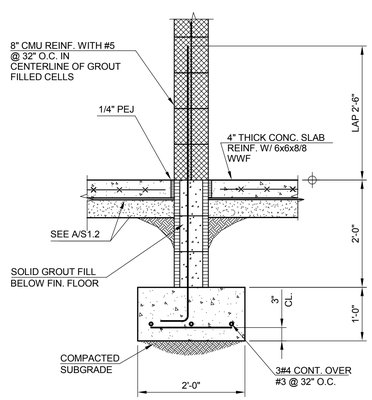

SECTION C S1.2

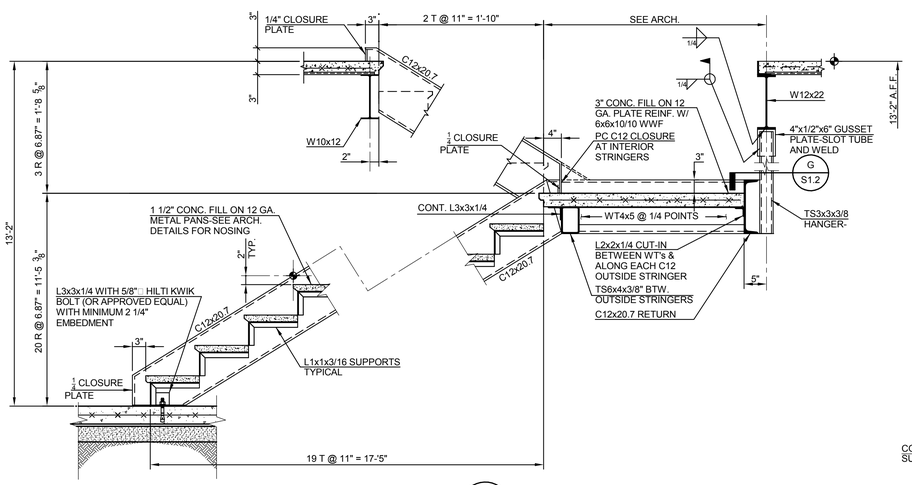

SECTION F S1.2

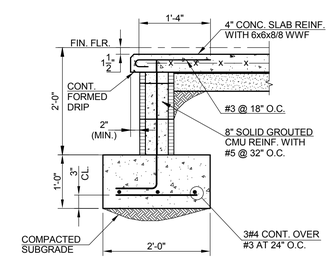

SECTION J S1.2

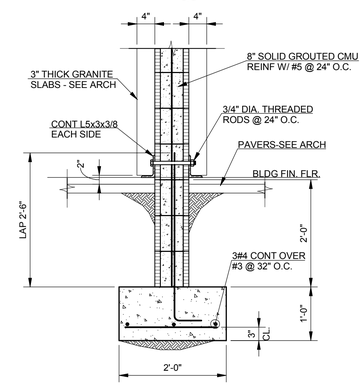

SECTION M S1.2

GREEN LINE ARCHITECTURE
28 E 35TH ST
SAVANNAH, GA 31401
T 912.447.5665
F 912.447.8381
WWW.GREENLINEARCH.COM

WEST SIDE AND ISLANDS LIBRARIES
LIVE OAK PUBLIC LIBRARIES
WEST SIDE LIBRARY
100 CENTRAL AVE.
GARDEN CITY, GA.

REVISIONS		
ADD.#	DATE	DESCRIPTION

SECTIONS

2. Scales as stated hereon are valid on the original drawing only and are hereby changed in proportion to the difference in size between the print and the original drawing.

3. Do not scale dimensions from prints. Plans and details are not always drawing to scale. Use dimensions given or consult the Architect for further clarification.

RELEASED FOR CONSTRUCTION

JOB NO: 11-010
ISSUE DATE: 05/13/13
DRAWN: Author

SAUSSY ENGINEERING
400 Johnny Mercer Boulevard • Suite E
P.O. Box 30597 • Savannah, Georgia 31410
Phone: (912) 898-8255 • Fax: (912) 898-1882
PROJECT NO. 11103

S1.2

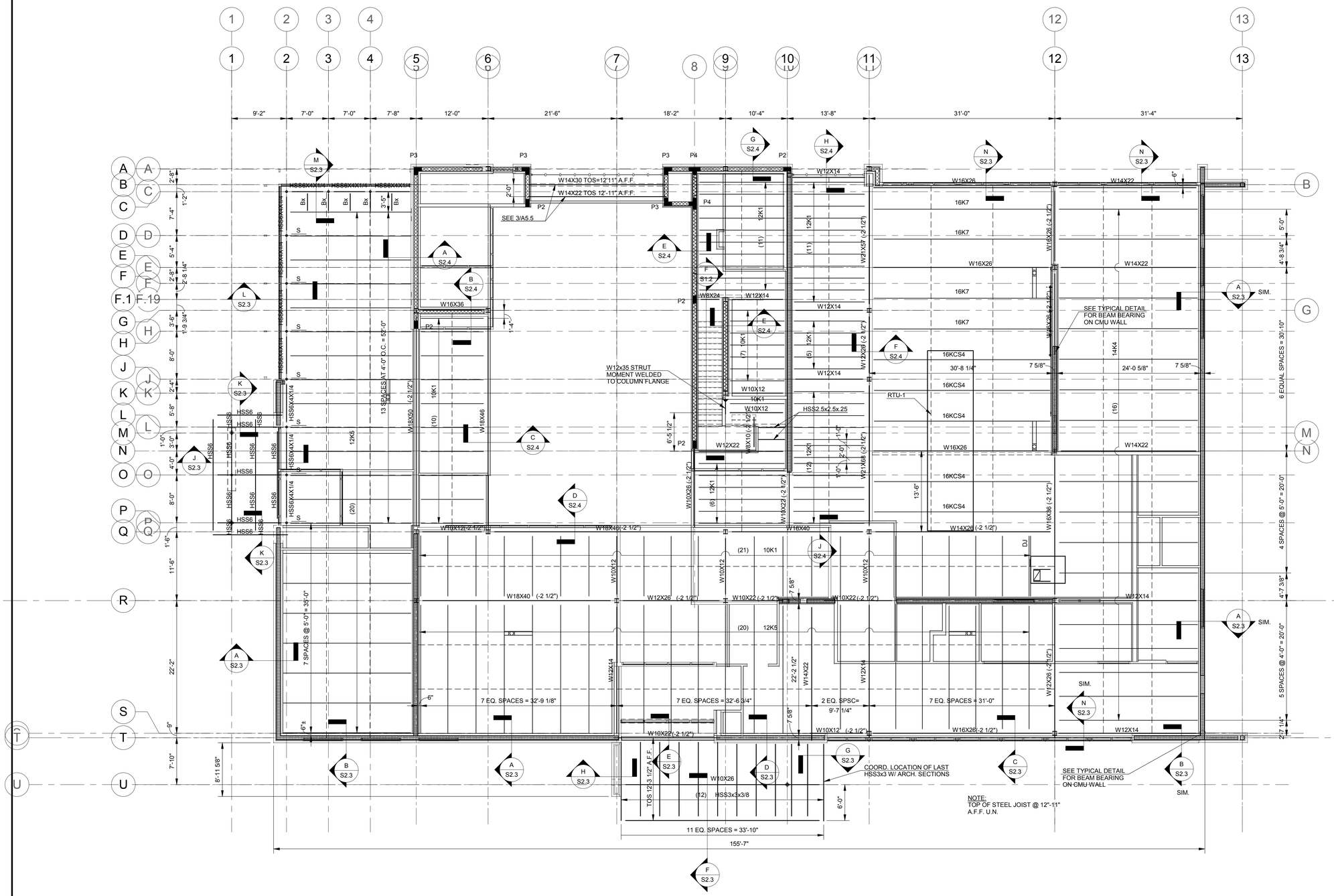

LOW ROOF/SECOND FLOOR FRAMING PLAN

SCALE: 1/8"-1'-0"

GREEN LINE ARCHITECTURE

28 E 35TH ST
SAVANNAH, GA 31401
T 912.447.5665
F 912.447.8381
WWW.GREENLINEARCH.COM

WEST SIDE AND ISLANDS LIBRARIES
LIVE OAK PUBLIC LIBRARIES
WEST SIDE LIBRARY
100 CENTRAL AVE.
GARDEN CITY, GA.

REVISIONS		
ADD.#	DATE	DESCRIPTION

SECOND FLOOR / LOW ROOF FRAMING PLAN

RELEASED FOR CONSTRUCTION

JOB NO: 11-010
ISSUE DATE: 05/13/13
DRAWN: Author

SAUSSY ENGINEERING
400 Johnny Mercer Boulevard - Suite E
P.O. Box 30597 - Savannah, Georgia 31410
Phone: (912) 898-8255 - Fax: (912) 898-1882
PROJECT NO. 11103

S2.1

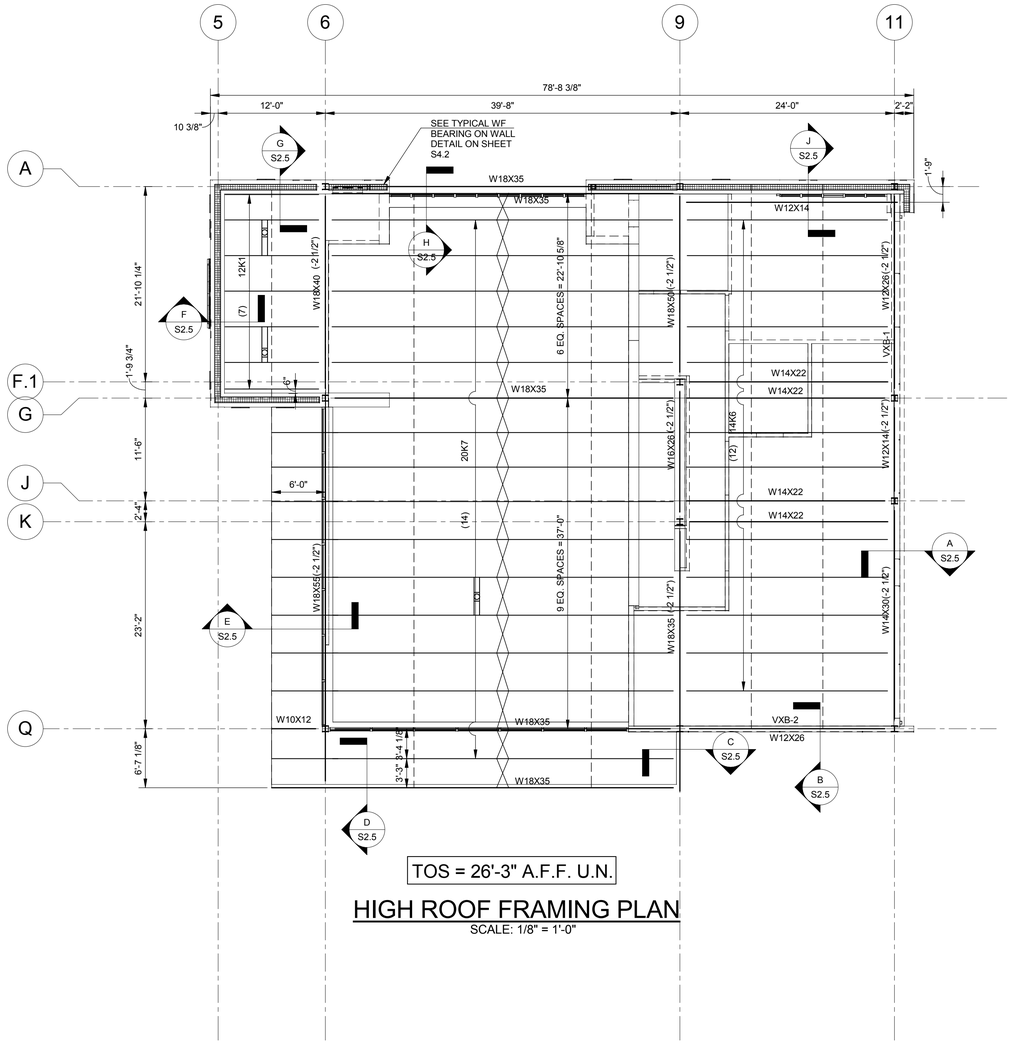

HIGH ROOF FRAMING PLAN

SCALE: 1/8" = 1'-0"

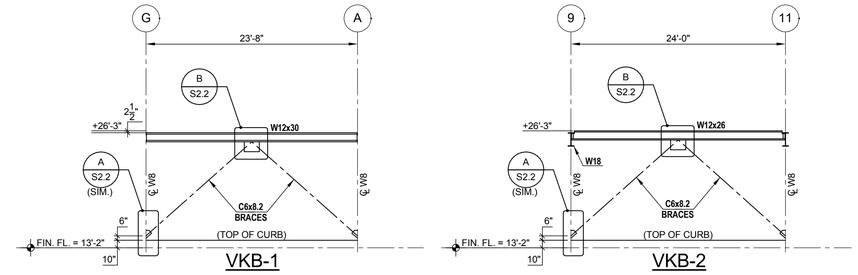

SCHEMATIC VERTICAL K-BRACING ELEVATIONS

SCALE: 1/8"=1'-0"

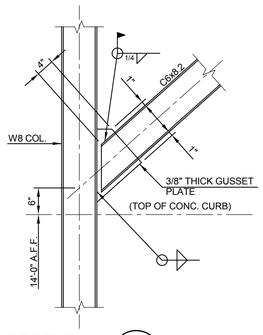

SECTION A S2.2

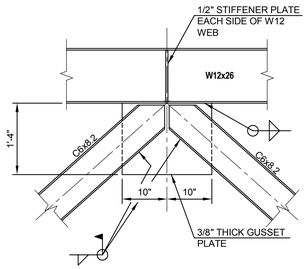

SECTION B S2.2

GREENLINE ARCHITECTURE
28 E 35TH ST
SAVANNAH, GA 31401
T 912.447.5665
F 912.447.8381
WWW.GREENLINEARCH.COM

WEST SIDE AND ISLANDS LIBRARIES

LIVE OAK PUBLIC LIBRARIES

WEST SIDE LIBRARY
100 CENTRAL AVE.
GARDEN CITY, GA.

REVISIONS		
ADD.#	DATE	DESCRIPTION

HIGH ROOF FRAMING PLAN

RELEASED FOR CONSTRUCTION

JOB NO: 11-010
ISSUE DATE: 05/13/13
DRAWN: Author

SAUSSY ENGINEERING
400 Johnny Mercer Boulevard • Suite E
P.O. Box 30597 • Savannah, Georgia 31410
Phone: (912) 898-8255 • Fax: (912) 898-1882
PROJECT NO. 11103

S2.2

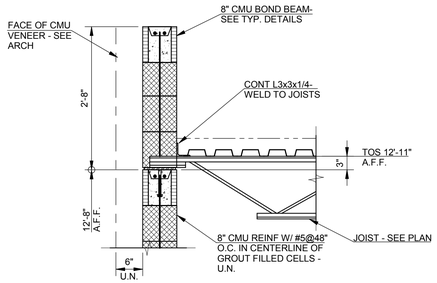

SECTION A S2.3

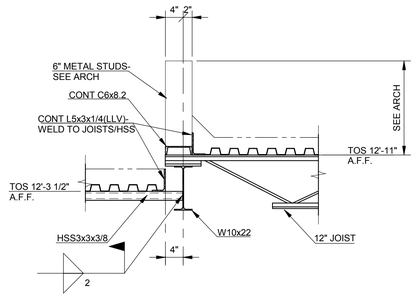

SECTION E S2.3

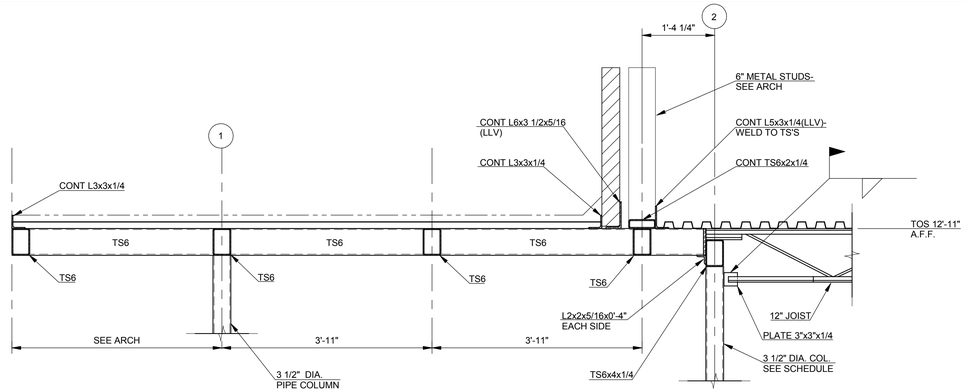

SECTION J S2.3

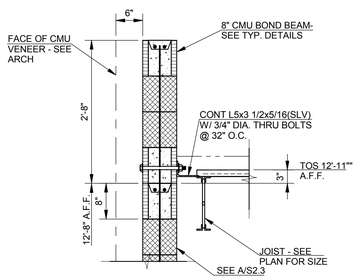

SECTION B S2.3

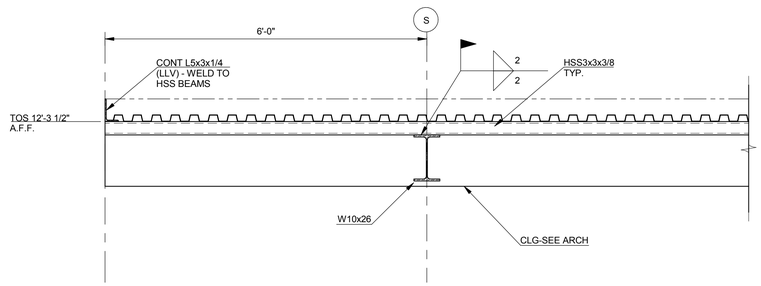

SECTION F S2.3

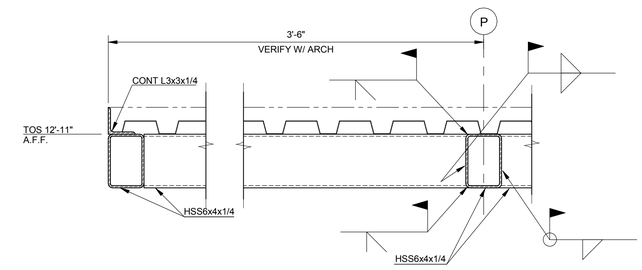

SECTION K S2.3

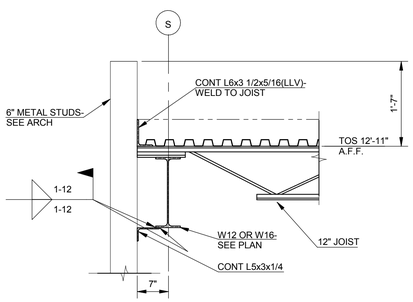

SECTION C S2.3

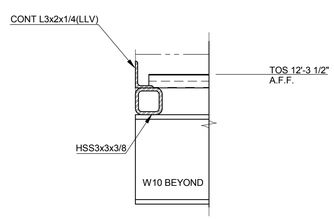

SECTION G S2.3

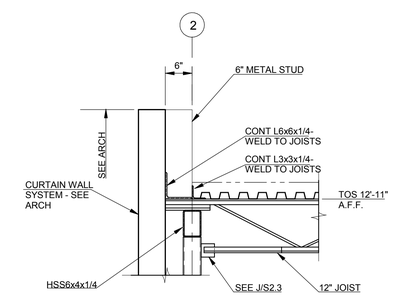

SECTION L S2.3

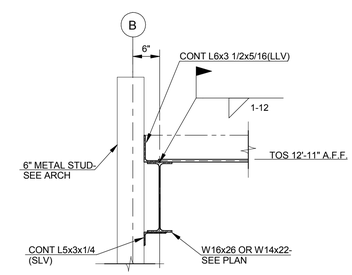

SECTION N S2.3

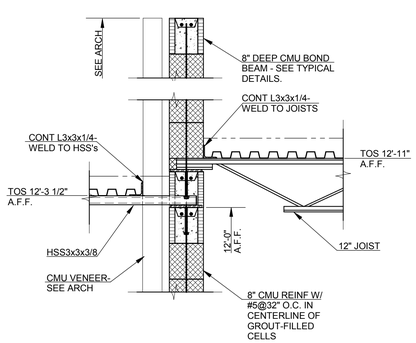

SECTION D S2.3

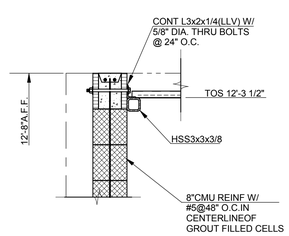

SECTION H S2.3

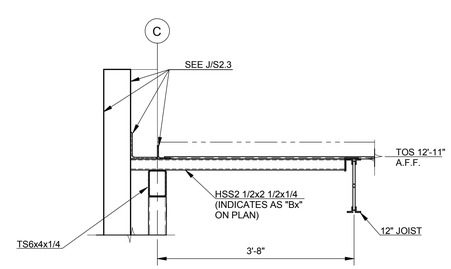

SECTION M S2.3

GREEN LINE ARCHITECTURE
28 E 35TH ST
SAVANNAH, GA 31401
T 912.447.5665
F 912.447.8381
WWW.GREENLINEARCH.COM

WEST SIDE AND ISLANDS LIBRARIES
LIVE OAK PUBLIC LIBRARIES
WEST SIDE LIBRARY
100 CENTRAL AVE.
GARDEN CITY, GA.

REVISIONS		
ADD.#	DATE	DESCRIPTION

SECTIONS

RELEASED FOR CONSTRUCTION

JOB NO: 11-010
ISSUE DATE: 05/13/13
DRAWN: Author

SAUSSY ENGINEERING
400 Johnny Mercer Boulevard - Suite E
P.O. Box 30597 - Savannah, Georgia 31410
Phone: (912) 898-8255 - Fax: (912) 898-1882

PROJECT NO. 11103

S2.3

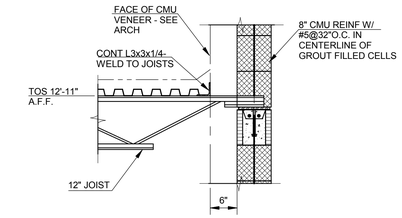

SECTION A S2.4

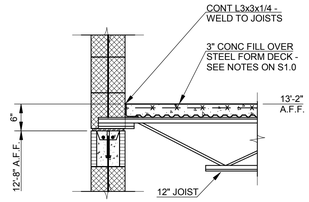

SECTION E S2.4

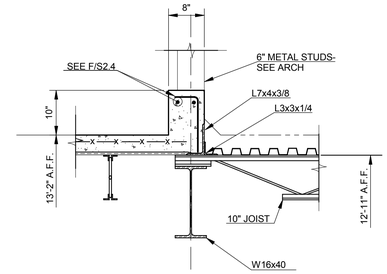

SECTION J S2.4

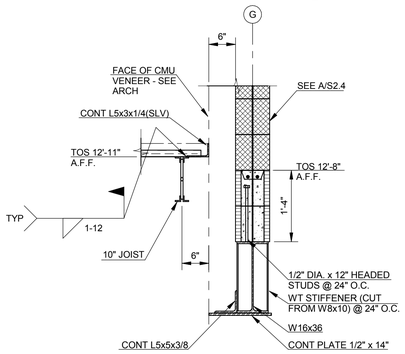

SECTION B S2.4

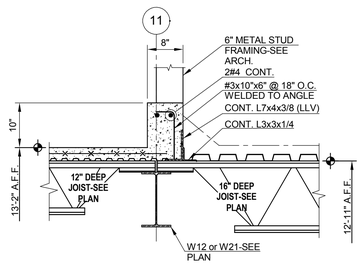

SECTION F S2.4

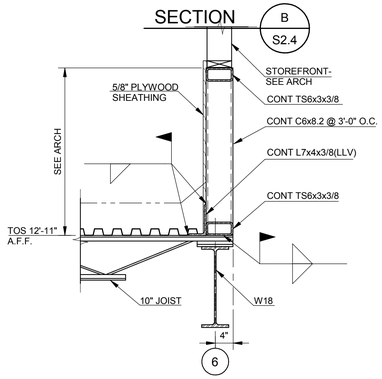

SECTION C S2.4

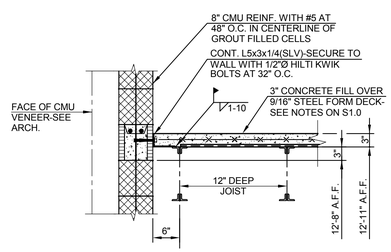

SECTION G S2.4

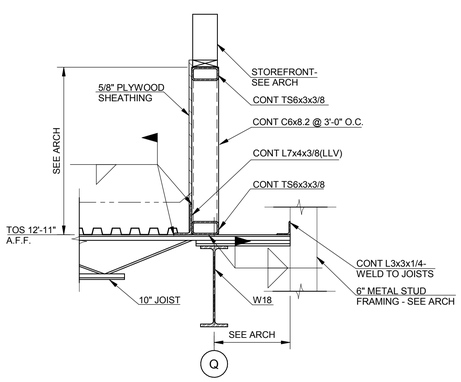

SECTION D S2.4

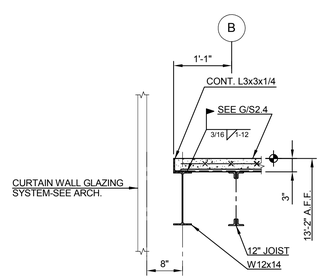

SECTION H S2.4

GREEN LINE ARCHITECTURE
28 E 35TH ST
SAVANNAH, GA 31401
T 912.447.5665
F 912.447.8381
WWW.GREENLINEARCH.COM

WEST SIDE AND ISLANDS LIBRARIES
LIVE OAK PUBLIC LIBRARIES
WEST SIDE LIBRARY
100 CENTRAL AVE.
GARDEN CITY, GA.

REVISIONS		
ADD.#	DATE	DESCRIPTION

SECTIONS

RELEASED FOR CONSTRUCTION

JOB NO: 11-010
ISSUE DATE: 05/13/13
DRAWN: Author

SAUSSY ENGINEERING
400 Johnny Mercer Boulevard • Suite E
P.O. Box 30597 • Savannah, Georgia 31410
Phone: (912) 898-8255 • Fax: (912) 898-1882
PROJECT NO. 11103

S2.4

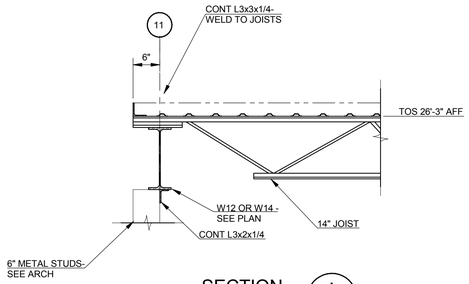

SECTION A S2.5

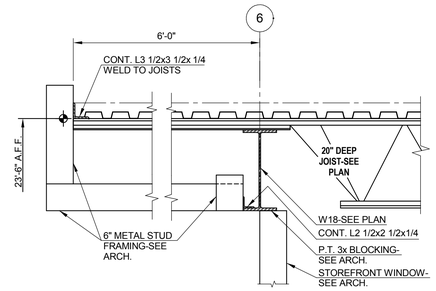

SECTION E S2.5

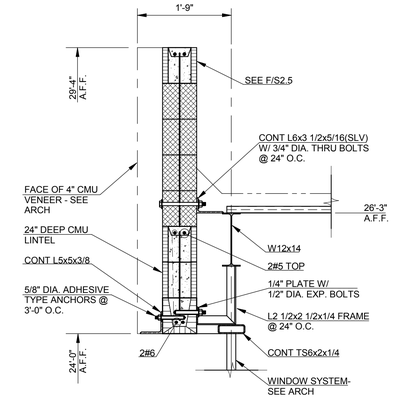

SECTION J S2.5

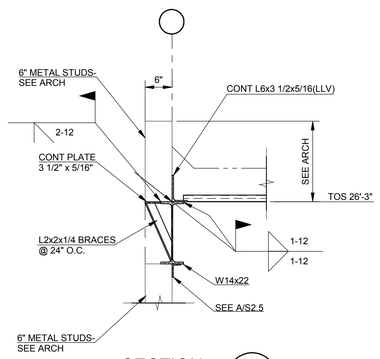

SECTION B S2.5

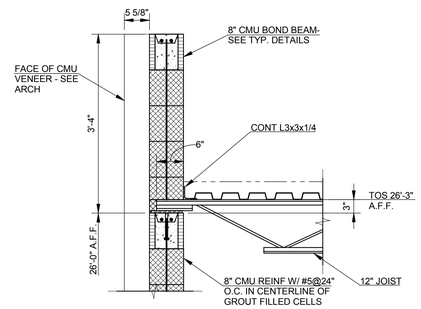

SECTION F S2.5

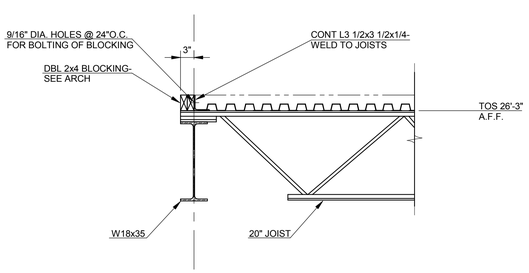

SECTION C S2.5

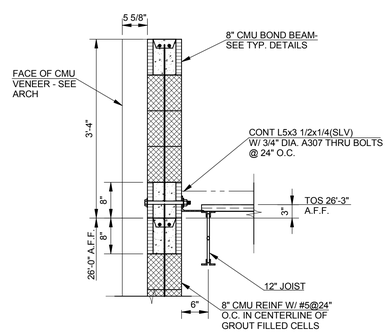

SECTION G S2.5

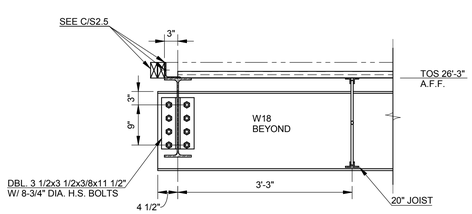

SECTION D S2.5

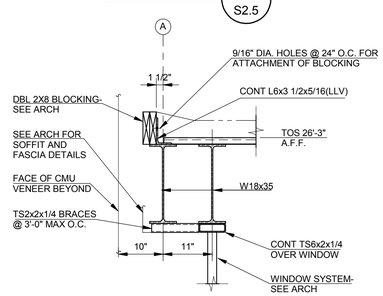

SECTION H S2.5

GREENLINE ARCHITECTURE

28 E 35TH ST
SAVANNAH, GA 31401
T 912.447.5665
F 912.447.8381
WWW.GREENLINEARCH.COM

WEST SIDE AND ISLANDS LIBRARIES
LIVE OAK PUBLIC LIBRARIES
WEST SIDE LIBRARY
100 CENTRAL AVE.
GARDEN CITY, GA.

REVISIONS		
ADD.#	DATE	DESCRIPTION

SECTIONS

RELEASED FOR
CONSTRUCTION

JOB NO: 11-010
ISSUE DATE: 05/13/13
DRAWN: Author

SAUSSY ENGINEERING
400 Johnny Mercer Boulevard - Suite E
P.O. Box 30597 - Savannah, Georgia 31410
Phone: (912) 898-8255 - Fax: (912) 898-1882

PROJECT NO. 11103

S2.5

COLUMN AND FOUNDATION SCHEDULE

COLUMNS																																							
MARK	A6	A9	A11	B12	B13	C2	C3	C4	D2	E12	F2	F.1-9	G5	G6	G11	H2	J2	J11	K9	L2	M1	N12	O1	O2	P1	P2	Q5	Q6	Q9	Q11	R5	R7	R9	R12	S11	S12	T13	U10
HIGH ROOF																																							
LOW ROOF (13'-4")																																							
(2nd FLOOR) (12'-11" U.N.)																																							
1st FLOOR	W8x31	W8x31	W8x35	W8x24	HSS8x8x5/8	HSS3 1/2 x 226	HSS3 1/2 x 226	HSS3 1/2 x 226	HSS3 1/2 x 226	W8x24	HSS3 1/2 x 226	W8x24	W8x24	W8x24	W8x24	HSS3 1/2 x 226	HSS3 1/2 x 226	W8x24	W8x24	HSS3 1/2 x 226	HSS3 1/2 x 226	W8x24	HSS3 1/2 x 226	HSS3 1/2 x 226	HSS3 1/2 x 226	HSS3 1/2 x 226	W8x24	W8x24	W8x24	W8x24	W8x24	W8x24	W8x24	W8x24	W8x24	W8x24	HSS8x8x5/8	HSS3 1/2 x 226
LOAD (KIPS)	14	21	39	9	0	2	2	2	4	18	4	37	15	43	61	4	6	59	37	6	4	17	4	6	3	6	16	38	58	57	13	26	11	23	10	14	0	11
BASE PLATE TYPE	BP2	BP2	BP2	BP2	BP3	BP1	BP1	BP1	BP1	BP2	BP1	BP2	BP2	BP2	BP2	BP1	BP1	BP2	BP2	BP1	BP1	BP2	BP1	BP1	BP1	BP1	BP2	BP2	BP2	BP2	BP2	BP2	BP2	BP2	BP2	BP2	BP3	BP1
PIER	CP12	CP12	CP12	CP12	N/A	CP12	CP12	CP12	CP12	CP14	CP12	CP14	CP14	CP14	CP16	CP12	CP12	CP16	CP14	CP12	CP12	CP14	CP12	CP12	CP12	CP12	CP14	CP14	CP16	CP16	CP14	CP14	CP14	CP14	CP14	CP14	N/A	CP12
FOOTING TYPE	F40	F40	F55	F40	F70	F30	F30	F30	F30	F40	F30	F55	F40	F55	F65	F30	F30	F65	F55	F30	F30	F40	F30	F30	F30	F30	F40	F55	F65	F65	F40	F45	F40	F45	F40	F40	F70	F35
NOTES					SEE H/S1.2																															SEE H/S1.2	

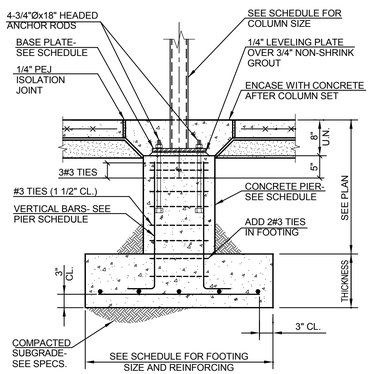

FOOTING WITH PIER

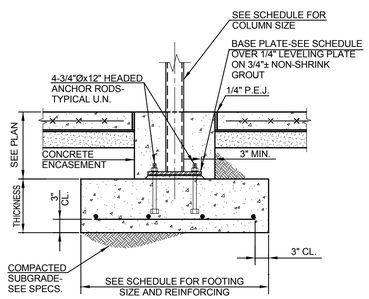

FOOTING WITHOUT PIER

TUBE SHAPED COLUMNS

(PIPE COLUMNS SAME)

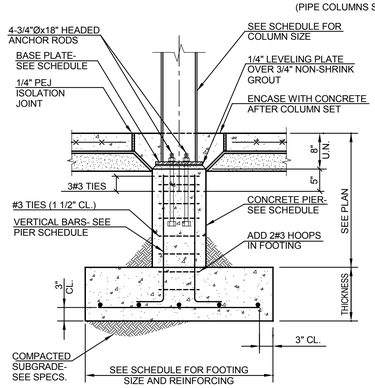

FOOTING WITH PIER

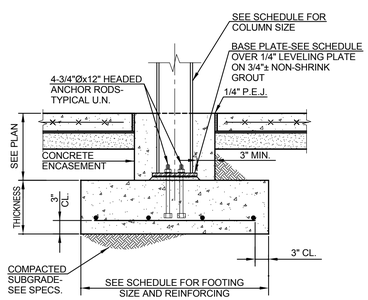

FOOTING WITHOUT PIER

WIDE FLANGE COLUMNS

TYPICAL COLUMN FOOTING DETAILS

CONCRETE PIER SCHEDULE

MARK	SIZE	REINFORCING VERT.	REINFORCING TIE SPACING	NOTES
CP12	12"x12"	4#6	6" O.C.	
CP14	14"x14"	4#6	6" O.C.	
CP16	16"x16"	8#6	6" O.C.	
CP18	18"x18"	8#6	6" O.C.	
CP20	20"x20"	12#6	6" O.C.	
CP22	22"x22"	12#6	6" O.C.	

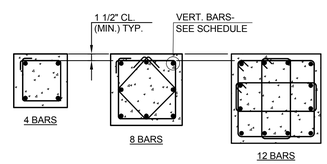

CONCRETE PIER DETAILS

NOTES:
1. SEE SCHEDULE & SECTIONS FOR PIER SIZE & REINFORCING.
2. TERMINATE VERTICAL BARS IN FOOTING WITH 90° HOOK (12) BAR DIAMETERS (MIN).
3. ALTERNATE LOCATION OF 90° AND 135° BENDS.
4. ALL PIERS TO BE BOARD FORMED.
5. TOP OF PIERS SHALL BE 8" BELOW FINISHED FLOOR U.N.
6. TOP OF VERTICAL DOWELS SHALL EXTEND TO 1 1/2" FROM TOP OF PIER.

FOOTING SCHEDULE

MARK	SIZE	DEPTH	REINF. E.W.	NOTES
F30	3'-0"x3'-0"	1'-0"	6#4	-
F35	3'-6"x3'-6"	1'-0"	6#4	-
F40	4'-0"x4'-0"	1'-0"	6#4	-
F45	4'-6"x4'-6"	1'-0"	4#5	-
F50	5'-0"x5'-0"	1'-0"	7#4	-
F55	5'-6"x5'-6"	1'-2"	5#5	-
F60	6'-0"x6'-0"	1'-2"	6#5	-
F65	6'-6"x6'-6"	1'-2"	7#5	-
F70	7'-0"x7'-0"	1'-2"	7#5	-

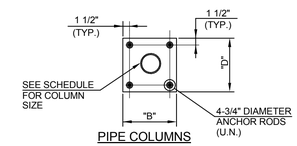

PIPE COLUMNS

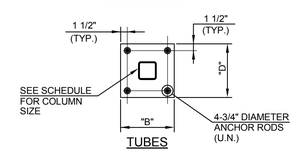

TUBES

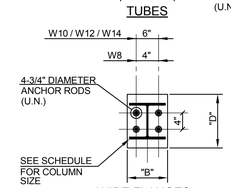

WIDE FLANGES

TYPICAL COLUMN BASE PLATE DETAILS

(UNLESS DETAILED OTHERWISE)

BASE PLATE SCHEDULE

MARK	SIZE "B"	SIZE "D"	THICKNESS	NOTES
BP1	10"	10"	5/8"	
BP2	9"	9"	3/4"	
BP3	16"	16"	1 1/4"	
BP4	14"	14"	3/4"	

SAUSSY ENGINEERING
400 Johnny Mercer Boulevard - Suite E
P.O. Box 30597 - Savannah, Georgia 31410
Phone: (912) 898-8255 - Fax: (912) 898-1882
PROJECT NO. 11103

GREEN LINE ARCHITECTURE
28 E 35TH ST
SAVANNAH, GA 31401
T 912.447.5665
F 912.447.8381
WWW.GREENLINEARCH.COM

WEST SIDE AND ISLANDS LIBRARIES
LIVE OAK PUBLIC LIBRARIES
WEST SIDE LIBRARY
100 CENTRAL AVE.
GARDEN CITY, GA.

REVISIONS		
ADD.#	DATE	DESCRIPTION

COLUMN AND FOUNDATION SCHEDULE

RELEASED FOR CONSTRUCTION

JOB NO: 11-010
ISSUE DATE: 05/13/13
DRAWN: JEH/GJH

S3.1

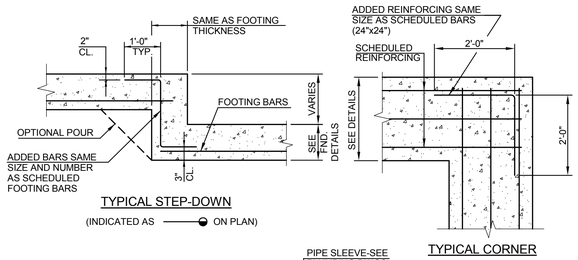

TYPICAL STEP-DOWN

(INDICATED AS ON PLAN)

TYPICAL CORNER

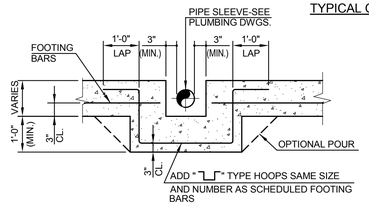

INTERFERENCE OFFSET @ GRAVITY SEWER

(COORDINATE W/ PLUMBING DRAWINGS)

WALL FOOTING DETAILS

(UNLESS DETAILED OTHERWISE)

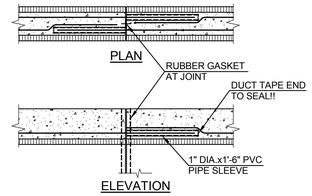

DETAIL @ CONTROL JOINTS

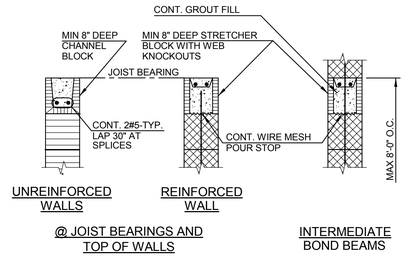

TYPICAL BOND BEAM DETAILS

BOND BEAM NOTES:

1. ALL CMU WALLS(INTERIOR,EXTERIOR, BEARING OR NON-BEARING), 6" THICK(NOMINAL) OR GREATER, SHALL HAVE A BOND BEAM AT THE TOP OF THE WALL.
2. WHERE WALLS ARE 10'-0" OR HIGHER, PROVIDE BOND BEAM AT MAXIMUM 8'-0" SPACING.
3. BOND BEAMS SHALL BE SHALL BE PROVIDED AT ALL JOIST BEARING ELEVATIONS AND WHERE DETAILED AT OTHER SPECIAL LOCATIONS OR AS SHOWN ON ARCHITECTURAL DRAWINGS.
4. LAP CONTINUOUS BOND BEAM REINFORCING 2'-6" AT SPLICES AND CONTROL JOINTS AS DETAILED HEREIN.
5. PROVIDE 2#5x24"x24" HORIZONTAL BARS AT CHANGES IN BOND BEAM DIRECTION.
6. WHERE BOND BEAM INTERRUPTED BY OPENINGS, BEND REINFORCING 12" INTO REINFORCED JAMBS.

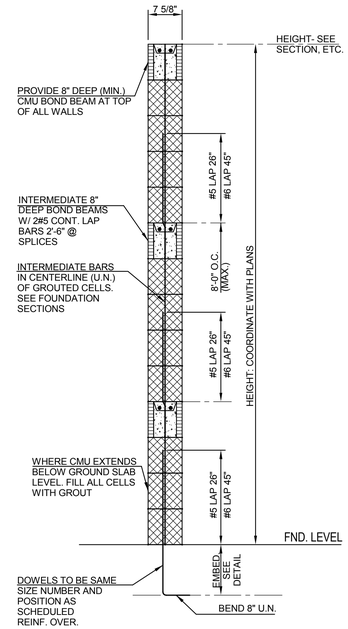

8" CMU

NOTE:
SHOP DRAWINGS SHALL BE FURNISHED BY GENERAL CONTRACTOR INCLUDING WALL ELEVATIONS AND PLANS DETAILING FINAL LAYOUT OF ALL VERTICAL AND HORIZONTAL REINFORCING REQUIRED BY THIS SCHEDULE,SECTIONS, AND STRUCTURAL NOTES IN THESE DOCUMENTS.

TYPICAL BOND BEAM AND VERTICAL REINFORCING BAR DETAILS

(UNLESS DETAILED OTHERWISE)

CMU LINTEL SCHEDULE

(UNLESS DETAILED OTHERWISE)

OPENING WIDTH	HEIGHT	REINFORCING		BEARING EA. END
		BOT. BARS	TOP BARS	
MAX. 3'-4"	8"	2#4	–	8"
MAX. 6'-0"	16"	2#6	–	16"
MAX. 8'-0"	16"	2#6	2#4	16"
MAX. 10'-0"	24"	2#7	2#6	16"

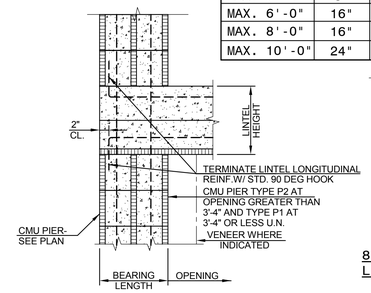

DETAIL AT BEARING

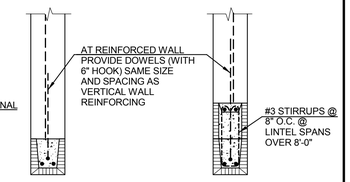

TYPICAL SECTIONS

NOTES:

(A) BEARING LENGTHS REFER TO CONCRETE MASONRY AND DO NOT INCLUDE APPLIED VENEERS.
(B) WHERE CONCRETE MASONRY EXPOSED, 16" HIGH LINTELS SHALL BE CONSTRUCTED USING 8" DEEP CHANNEL BLOCK PLUS 8" DEEP SPANDREL BLOCK.
(C) WHERE LINTEL BEARING IS ADJACENT TO A CMU CONTROL JOINT, OFFSET CONTROL JOINT OVER OPENING TO END OF BEARING. DISCONTINUE VERTICAL REINFORCING AT JAMB BELOW AND PROVIDE 2 LAYERS 30lb. ASPHALT FELT BOND BREAKER BELOW LINTEL BEARING.

BRICK LINTEL SCHEDULE

(UNLESS DETAILED OTHERWISE)

OPENING WIDTH	SIZE	BEARING EA. END
MAX. 4'-0"	L3 1/2x3 1/2x5/16	6"
MAX. 6'-0"	L4x3 1/2x5/16 (LLV)	8"
MAX. 8'-0"	L6x3 1/2x5/16 (LLV)	10"
MAX. 10'-0"	L6x3 1/2x5/16 (LLV)	12"
MAX. 10'-8"	L6x4x3/8 (LLV)	12"

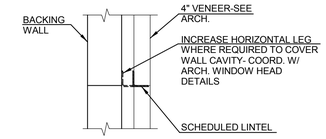

SECTION

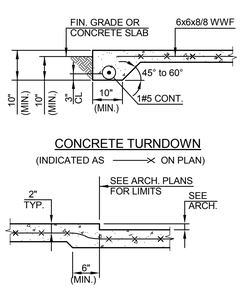

CONCRETE TURNDOWN

(INDICATED AS ON PLAN)

@ RECESSED SLAB

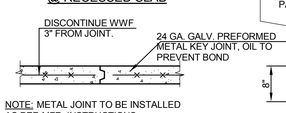

NOTE: METAL JOINT TO BE INSTALLED AS PER MFR. INSTRUCTIONS

TYPICAL FLOOR JOINT

(INDICATED FJ ON PLAN)

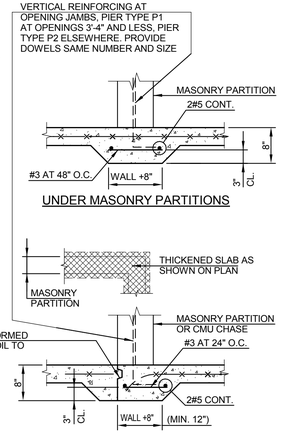

UNDER MASONRY PARTITIONS

FLOOR JOINT ADJACENT TO PARTITION

(INDICATED WFJ ON PLAN)

TYPICAL FLOOR SLAB ON GRADE DETAILS

(UNLESS DETAILED OTHERWISE)

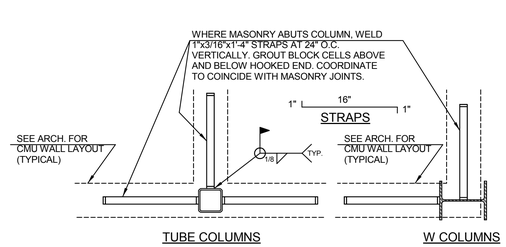

TYPICAL COLUMN TO WALL TIES

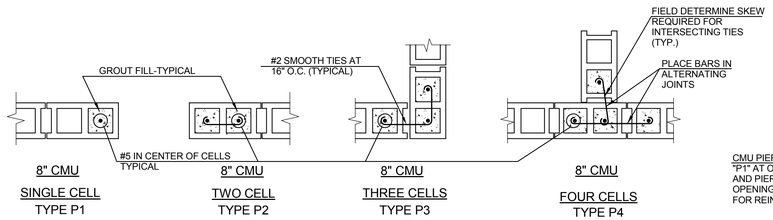

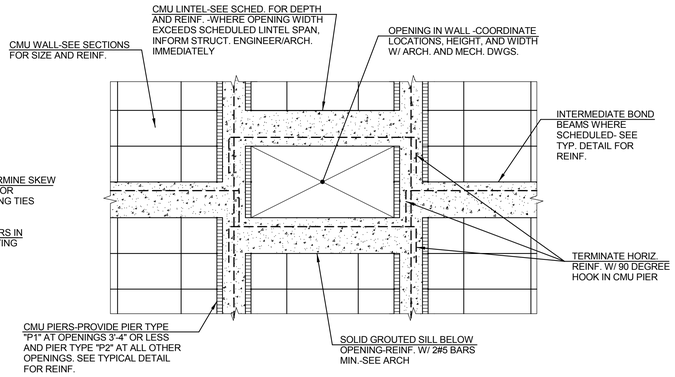

TYPICAL DETAIL AT OPENINGS AND MECHANICAL PENETRATIONS IN CMU WALLS

(UNLESS DETAILED OTHERWISE)

NOTE: DETAIL IS **NOT** APPLICABLE WHERE PRECAST HOLLOWCORE SLAB BEARS ON CMU WALL- SEE OTHER APPLICABLE TYPICAL DETAIL FOR OPENINGS BELOW HOLLOWCORE SLAB

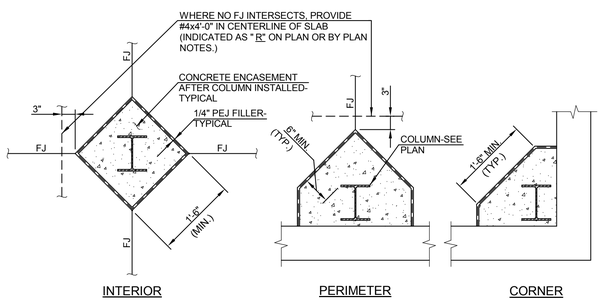

INTERIOR PERIMETER CORNER

TYP. COLUMN ISOLATION JOINT DETAIL @ CONCRETE SLABS

(WF COLUMNS SHOWN; TS COLUMNS SAME)

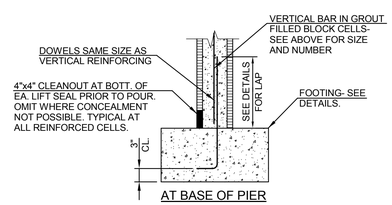

AT BASE OF PIER

TYPICAL DETAILS FOR REINFORCED CONCRETE MASONRY PIERS

(UNLESS DETAILED OTHERWISE)

GREEN LINE ARCHITECTURE

28 E 35TH ST
SAVANNAH, GA 31401
T 912.447.5665
F 912.447.8381
WWW.GREENLINEARCH.COM

WEST SIDE AND ISLANDS LIBRARIES
LIVE OAK PUBLIC LIBRARIES
WEST SIDE LIBRARY
100 CENTRAL AVE.
GARDEN CITY, GA.

REVISIONS		
ADD.#	DATE	DESCRIPTION

TYPICAL DETAILS

RELEASED FOR CONSTRUCTION

JOB NO: 11-010
ISSUE DATE: 05/13/13
DRAWN: JEH/GJH

SAUSSY ENGINEERING
400 Johnny Mercer Boulevard - Suite E
P.O. Box 30597 - Savannah, Georgia 31410
Phone: (912) 898-8255 - Fax: (912) 898-1882
PROJECT NO. 11103

S4.1

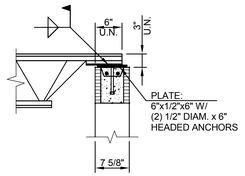

JOIST BEARING FROM ONE SIDE ON 8" CMU WALL

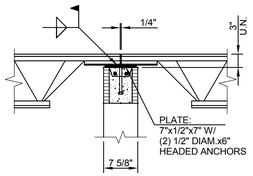

JOIST BEARING FROM TWO SIDES ON 8" CMU WALL

TYPICAL DETAIL AT JOISTS BEARING ON MASONRY WALL

(UNLESS DETAILED OTHERWISE)

NOTE:
1. WHERE DOUBLE JOIST (DJ) INDICATED ON PLAN, INCREASE PLATE DIMENSION PARALLEL TO WALL TO 12" (MIN.) AND PROVIDE (3) 1/2" DIAM.x6"x2" ANCHORS.
2. EXTEND JOIST BOTTOM CHORDS TO 1/2" FROM FACE OF WALL WHERE REQ'D. FOR CEILING SUPPORT. COORDINATE WITH ARCHITECTURAL DRAWINGS.
3. WHERE CHANNEL BLOCK TYPE BOND BEAMS ARE SHOWN CHANGE ANCHORS TO 1/2" DIAM.x4"x2".

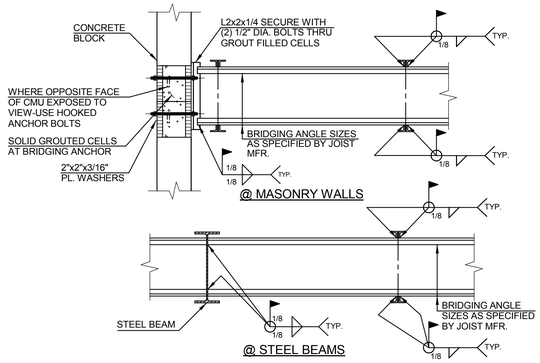

BRIDGING ANCHORS FOR K-SERIES JOISTS

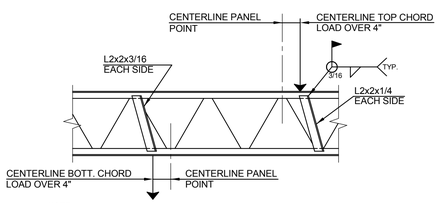

NOTE:
ADD WEB REINFORCING WHEN LOADS EXCEED 150 LB. AND ARE LOCATED OVER 4" FROM A WEB PANEL POINT. LOADS SHALL BE DETERMINED BY CONTRACTOR FOR EQUIPMENT FURNISHED AND SHALL BE SHOWN ON SHOP DRAWINGS.

TYPICAL JOIST WEB REINFORCING AT CONCENTRATED LOADS

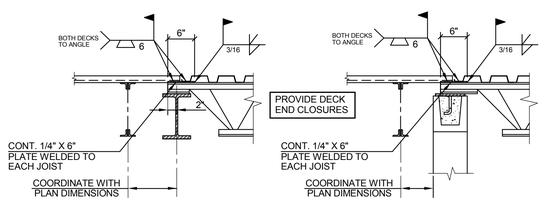

TYPICAL DETAIL AT CHANGES IN DECK DIRECTION

UNLESS DETAILED OTHERWISE

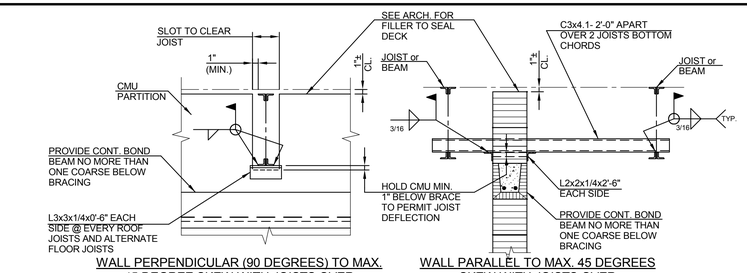

WALL PERPENDICULAR (90 DEGREES) TO MAX. 45 DEGREE SKEW WITH JOISTS OVER

WALL PARALLEL TO MAX. 45 DEGREES SKEW WITH JOISTS OVER

WALLS EXTENDING TO ROOF DECK

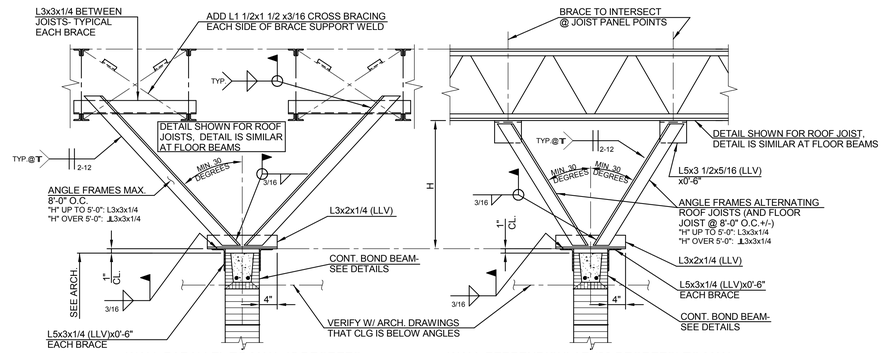

WALL PARALLEL TO MAX. 45 DEGREES SKEW WITH ROOFJOISTS/FLOOR BEAMS OVER

WALL PERPENDICULAR (90 DEGREES) TO MAX. 45 DEGREE SKEW WITH ROOF JOISTS/FLOOR BEAMS OVER

WALLS NOT EXTENDING TO FLOOR DECK, FLOOR BEAMS, ROOF JOISTS, OR ROOF DECK

SPECIAL WALL BRACING WHERE NOT OTHERWISE SHOWN

TO BE ADDED FOR:
1. EXTERIOR WALLS WHERE SETBACK BELOW ROOF.
2. INTERIOR PARTITIONS. OMIT BRACE IF WALL HAS CORNERS OR INTERSECTING PARTITIONS LESS THAN THE FOLLOWING SPACING.
   6" CMU: 18'-0"
   8" CMU: 24'-0"
   12" CMU: 30'-0"

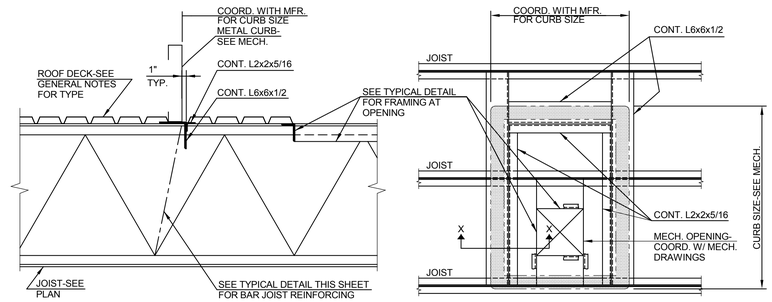

SECTION X-X (TYPICAL)

PLAN

DETAIL OF SUPPORTS FOR ROOF TOP CURBS UNDER MECHANICAL EQUIPMENT AND SMOKE HATCHES

NOTES: (UNLESS DETAILED OTHERWISE)
1. DETAIL DEPICTS CURB SUPPORTED BY MULTIPLE JOISTS. CONDITION SHALL BE THE SAME FOR CURB SUPPORTED BY ONLY 2 JOISTS.
2. BAR JOIST SECTIONS ARE SHOWN. DETAIL SHALL BE THE SAME FOR WF SECTIONS.
3. COORDINATE EXACT LOCATIONS AND DIMENSIONS WITH MECHANICAL DRAWINGS AND ARCH. DRAWINGS.
4. DETAIL APPLIES TO MECHANICAL EQUIPMENT INCLUDING EXHAUST FANS, COMBUSTION AIR INTAKES, GRAVITY VENTILATORS, ETC,. COORDINATE WITH MECHANICAL FOR SIZES AND LOCATIONS.
5. DETAIL APPLIES TO ROOF HATCHES AND SMOKE HATCHES- COORD WITH ARCH. FOR LOCATIONS AND DIMENSIONS.

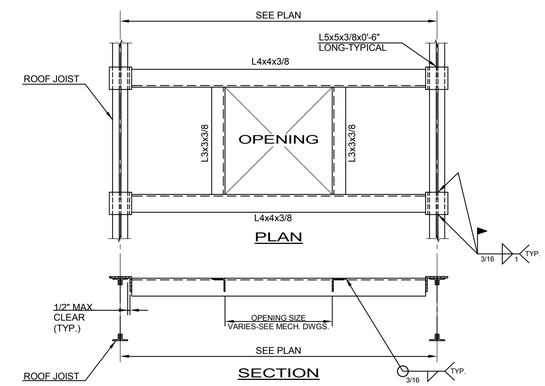

TYPICAL DETAIL AT FLAT ROOF OPENINGS

N.T.S.

NOTE:
1. THIS DETAIL SHALL APPLY TO ALL ROOF OPENINGS OVER 8" IN EITHER DIRECTION AND THE SUPPORT OF ROOF DRAINS WHERE SPECIFIED ON ARCH. OR PLUMBING DRAWINGS.
2. COORDINATE SIZE AND LOCATION OF ROOF OPENING WITH MECHANICAL DRAWINGS.
3. REFER TO OTHER APPLICABLE TYPICAL DETAIL AT MECHANICAL ROOF TOP EQUIPMENT

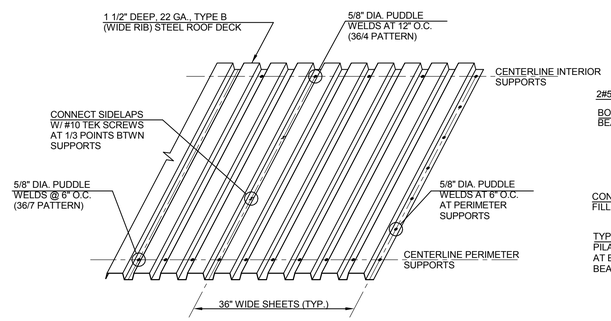

TYPICAL STEEL ROOF DECK ATTACHMENT DETAIL

N.T.S.

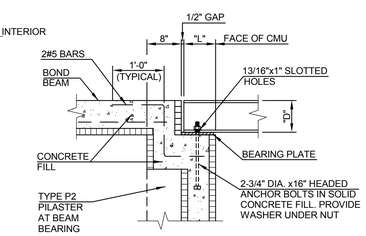

BEAM PARALLEL TO WALL

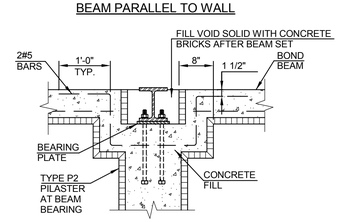

BEAM PERPENDICULAR TO WALL

"D"	"L"	PLATE
TO 8"	8"	7 1/2"x1/2"x7 1/2"
9"-12"	16"	7 1/2"x5/8"x1'-0"
14"-16"	16"	7 1/2"x3/4"x1'-2"

"L" INDICATES LENGTH OF BEARING PARALLEL TO WALL. BEAMS PERPENDICULAR TO WALL SHALL BEAR FULL WIDTH LESS 2" IF MASONRY EXPOSED ON OPPOSITE FACE OR FULL WIDTH IF BRICK VENEERED ON OPPOSITE FACE.

TYPICAL BEAM BEARING ON WALL

(UNLESS DETAILED OTHERWISE)

NOTES:
1. NUTS SHALL BE HAND TIGHT ONLY
2. PROVIDE LAYER OF 30 LB. BLDG. FELT BETWEEN BEAM AND BEARING PLATE.

CAP PLATE THICKNESS	
COL. SIZE	CAP PLATE
8" - 10"	3/4" THICK
12" - 16"	1" THICK

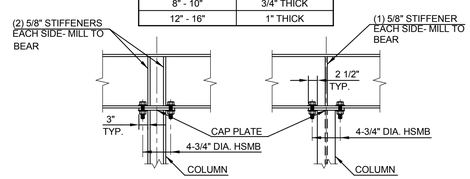

WEB PARALLEL TO BEAM-W SECTION ONLY

TUBE COLS. & W COLS. WEB PERPENDICULAR TO BEAM

CAP PLATE DETAIL @ CANTILEVERED BEAM

(UNLESS DETAILED OTHERWISE)

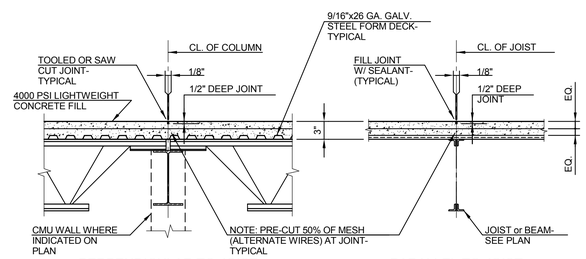

PERPENDICULAR TO JOIST

PARALLEL TO JOIST

TYPICAL ELEVATED SLAB DETAILS

N.T.S.

SLAB JOINTING NOTES:
1. ALL ELEVATED SLABS (EXCEPT COMPOSITE SLABS) SHALL BE JOINTED PER THIS DETAIL. SAW CUT JOINTS AS SOON AS CONCRETE HAS CURED SUFFICIENTLY TO ALLOW CONSTRUCTION TRAFFIC ON SLAB.
2. JOINTS SHALL BE PROVIDED AT CENTERLINES OF ALL COLUMNS IN BOTH DIRECTIONS. WHERE COLUMN GRID DIMENSIONS EXCEED 25 FEET, ADD INTERMEDIATE JOINT BETWEEN COLUMNS.
3. WHERE JOISTS ARE SUPPORTED ON WALLS (NON-STEEL FRAMED STRUCTURES), PROVIDE SPACING OF JOINTS TO RESULT IN A MAXIMUM SLAB AREA BETWEEN JOINTS OF 400 SQUARE FEET.
4. IN NO CASE SHALL SLABS BE JOINTED SUCH THAT THE JOINT SPACING IN ONE DIRECTION EXCEEDS THE JOINT SPACING IN THE OPPOSITE DIRECTION BY A RATIO OF 2:1. PROVIDE ADDITIONAL JOINTS AS NEEDED.

GREENLINE ARCHITECTURE
28 E 35TH ST
SAVANNAH, GA 31401
T 912.447.5665
F 912.447.8381
WWW.GREENLINEARCH.COM

WEST SIDE AND ISLANDS LIBRARIES
LIVE OAK PUBLIC LIBRARIES
WEST SIDE LIBRARY
100 CENTRAL AVE.
GARDEN CITY, GA.

REVISIONS		
ADD.#	DATE	DESCRIPTION

TYPICAL DETAILS

RELEASED FOR CONSTRUCTION

JOB NO: 11-010
ISSUE DATE: 05/13/13
DRAWN: JEH/GJH

SAUSSY ENGINEERING
400 Johnny Mercer Boulevard - Suite E
P.O. Box 30597 - Savannah, Georgia 31410
Phone: (912) 898-8255 - Fax: (912) 898-1882

PROJECT NO. 11103

S4.2